CONSTRUCTION PLANS FOR

CAMBRIA COMMUNITY SERVICES DISTRICT

STUART STREET TANKS REPLACEMENT PROJECT

MAY 2025

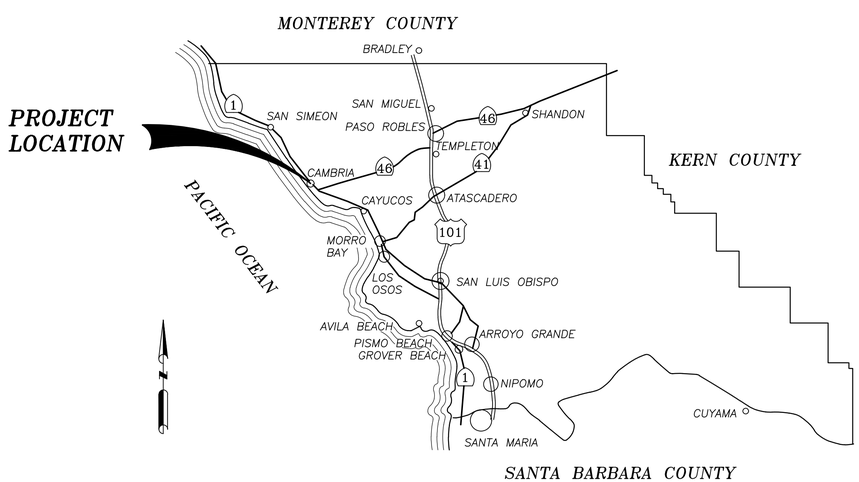

VICINITY MAP
N.T.S.

LOCATION MAP
N.T.S.

APPROVALS

JAMES GREEN
UTILITIES DEPARTMENT MANAGER

DATE

Know what's **below.**
Call before you dig.

DWG: N:\Cambria CSD\Cambria-2024-001 Stuart Street Tanks Replacement\300 Engineering\301 CAD/Plansets\G-001.dwg USER: cakins
DATE: May 02, 2025 10:34am XREFS: cambria csd JHanlon-Sig IMAGES: CCSD_Logo.PNG G-IM-MKN.png

CLIENT

CAMBRIA COMMUNITY SERVICES DISTRICT
2150 MAIN STREET, #1-A
CAMBRIA, CA 93428
TEL. (805) 927-6223

PROJECT

STUART STREET TANKS REPLACEMENT PROJECT

354 PACIFIC STREET
SAN LUIS OBISPO, CA 93401 (805) 329-4773

ENGINEER OF RECORD

JON E. HANLON, P.E.
NO. M33232

DATE
MAY 2025

SHEET
G-001
1 OF 20

GENERAL NOTES

1. NOTIFY THE DISTRICT ONE WEEK PRIOR TO COMMENCING CONSTRUCTION ACTIVITIES.
2. CONTACT UTILITY COMPANIES WITH SERVICES IN THE AREA FOR LOCATING UNDERGROUND LINES AND CABLES, AND COORDINATE WITH THE UTILITY FACILITIES AFFECTED BY THE CONSTRUCTION PRIOR TO ANY EXCAVATION NEAR EXISTING FACILITIES. CONTACT UNDERGROUND SERVICES ALERT AT 811.
3. IF SIGNS AND POSTS ARE REMOVED DURING CONSTRUCTION, THE CONTRACTOR SHALL REPLACE TO THEIR ORIGINAL CONDITION OR BETTER. SITE SHALL BE SECURED DURING NON-WORKING HOURS.
4. CONSTRUCTION ACTIVITIES SHALL BE LIMITED TO DISTRICT'S NORMAL OPERATING HOURS OF 7:00 AM TO 5:00 PM, MONDAY THRU FRIDAY UNLESS WRITTEN PERMISSION IS RECEIVED FROM DISTRICT. WORK SHALL NOT BE CONDUCTED ON DISTRICT'S OBSERVED HOLIDAYS WITHOUT WRITTEN PERMISSION FROM DISTRICT.
5. SURVEY MONUMENTS ARE TO BE PROTECTED IN PLACE AND REPLACED IN KIND IF DISTURBED DURING CONSTRUCTION.
6. SOME SECTIONS OF THE TANKS ARE IN CLOSE PROXIMITY TO EXISTING UTILITIES. TAKE PRECAUTIONARY MEASURES TO PROTECT UTILITIES AND STRUCTURES SHOWN AS WELL AS ANY AND ALL OTHERS NOT OF RECORD OR NOT SHOWN ON THE PLANS. ALL SUCH IMPROVEMENTS OR STRUCTURES DAMAGED BY THE CONTRACTOR'S OPERATIONS SHALL BE REPAIRED OR RECONSTRUCTED TO ORIGINAL DESIGN CONDITIONS AND/OR THE APPLICABLE REQUIREMENTS OF THE AFFECTED UTILITY AT THE CONTRACTOR'S EXPENSE.
7. UPON LEARNING OF THE EXISTENCE AND LOCATIONS OF ANY UNDERGROUND FACILITIES NOT SHOWN OR SHOWN INACCURATELY ON THESE PLANS OR NOT PROPERLY MARKED BY THE UTILITY OWNER, IMMEDIATELY NOTIFY THE DISTRICT AND THE DISTRICT REPRESENTATIVE BY TELEPHONE AND IN WRITING.
8. MAINTAIN THE WORK AREA IN A NEAT, CLEAN, AND SANITARY CONDITION AT ALL TIMES AND TO THE SATISFACTION OF THE DISTRICT. STREETS SHALL BE KEPT CLEAN OF DEBRIS, WITH DUST AND OTHER NUISANCES BEING CONTROLLED AT ALL TIMES.
9. MAINTAIN A COMPLETE AND ACCURATE RECORD OF ALL CHANGES IN CONSTRUCTION FROM THAT SHOWN IN THESE PLANS AND SPECIFICATIONS FOR THE PURPOSE OF PROVIDING A BASIS FOR RECORD DRAWINGS. NO CHANGES FROM THAT SHOWN ON THESE PLANS AND SPECIFICATIONS SHALL BE MADE WITHOUT PRIOR WRITTEN APPROVAL OF THE DISTRICT'S REPRESENTATIVE.
10. FURNISH AND MAINTAIN CHEMICAL TOILETS FOR USE BY WORKERS AND SUBCONTRACTORS.
11. VERIFY DIMENSIONS AND CONDITIONS AT THE SITE BEFORE STARTING WORK. ANY CONFLICT BETWEEN DETAILS OR DIMENSIONS ON THE DRAWINGS SHALL BE REPORTED PROMPTLY TO THE DISTRICT'S REPRESENTATIVE WHO WILL DETERMINE THE INTENT OF THE DRAWINGS. ALL SUCH CHANGES TO THE CONSTRUCTION SHALL BE APPROVED BY THE DISTRICT'S REPRESENTATIVE PRIOR TO CONSTRUCTION.
12. SUBMIT DEMOLITION AND CONSTRUCTION SEQUENCING PLAN PER SPECIFICATION SECTION 011100.
13. REPLACE IN KIND PAVED AREAS, SUCH AS DRIVEWAYS, CURBS AND GUTTERS, THAT ARE CUT, REMOVED, DAMAGED, OR OTHERWISE DISTURBED DURING CONSTRUCTION.
14. PROVIDE VIDEO DOCUMENTATION OF THE EXISTING CONDITIONS OF THE PROJECT SITE AND SURROUNDING AREA. SUBMIT THE VIDEO TO THE CITY PRIOR TO THE START OF CONSTRUCTION PER SPECIFICATION SECTION 013233.

PIPELINE NOTES

1. MINIMUM COVER OVER TOP OF PIPELINES SHALL BE 36 INCHES UNLESS INDICATED OTHERWISE.
2. APPLY LUBRICANT WHEN INSTALLING ALL PIPING BOLTS AND NUTS.
3. COAT ALL BURIED BOLTS AND NUTS PER SPECIFICATION SECTION 099000, SYSTEM 21.
4. WRAP ALL BURIED VALVES AND DUCTILE IRON PIPE AND FITTINGS PER SPECIFICATION SECTION 099754.
5. DISINFECT PER SPECIFICATION SECTION 331300 AND PRESSURE TEST PER SPECIFICATION SECTION 400515.
6. ONLY DISTRICT PERSONNEL WILL OPERATE EXISTING VALVES AND EQUIPMENT. COORDINATE WITH OPERATIONS PERSONNEL THREE (3) DAYS IN ADVANCE OF NEED FOR ANY SUCH OPERATION.
7. COMPACTION OF BACKFILL MATERIALS SHALL BE BY MECHANICAL EQUIPMENT IN ACCORDANCE WITH SPECIFICATION SECTIONS 312300 AND 312316. NO FLOODING OR JETTING ALLOWED.
8. ALL BURIED DUCTILE-IRON PIPE AND FITTINGS SHALL BE RESTRAINED PER SPECIFICATION SECTION 402040.

EROSION CONTROL NOTES

1. EROSION CONTROL DEVICES SHALL BE INSTALLED TO PREVENT SILT OR DUST FROM LEAVING THE SITE. MEASURES INSTALLED SHALL CONFORM TO THOSE SPECIFIED AS "BEST MANAGEMENT PRACTICES" IN THE REGIONAL WATER QUALITY BOARD'S EROSION AND SEDIMENT CONTROL FIELD MANUAL. IN THE EVENT THAT THE INSTALLED DEVICES FAIL, ADDITIONAL OR IMPROVED DEVICES SHALL BE PLACED IMMEDIATELY. EROSION SHALL BE CONTROLLED AT THE SOURCE. THE PROJECT PERIMETER SHALL BE PROTECTED WITH DE-SILTING DEVICES.
2. PROJECT DRIVEWAYS AND CONSTRUCTION ENTRANCES SHALL BE PROTECTED AGAINST EROSION AND TRACKING OF MUD AND DEBRIS AT ALL TIMES, INCLUDING EVENINGS, WEEKENDS, AND HOLIDAYS. SUCH PROTECTION MAY BE MODIFIED TO PROVIDE ACCESS TO WORK SITE DURING WORKING HOURS.
3. ALL STOCKPILES SHALL BE PROTECTED AGAINST WIND AND WATER EROSION, IMMEDIATELY UPON PLACEMENT. SUCH PROTECTION SHALL REMAIN IN PLACE UNTIL USE OR REMOVAL OF THE STOCKPILE, REGARDLESS OF THE TIME OF YEAR.
4. ALL FRESH CUT AND FILL SLOPES SHALL BE IMMEDIATELY PROTECTED BY INSTALLATION OF EROSION CONTROL DEVICES, AND UNTIL PERMANENT EROSION CONTROL IS ESTABLISHED.
5. DURING THE CONSTRUCTION PERIOD, THE PROJECT FRONTAGE(S) SHALL BE SWEPT AND KEPT FREE OF DIRT, DUST, AND DEBRIS.
6. WASTE MATERIALS SHALL NOT BE WASHED OFFSITE. THIS INCLUDES BUT IS NOT LIMITED TO SOIL, PAINT, GROUT, COLOR COAT, CONCRETE DUST, SAW RESIDUES, GRINDINGS, AND OIL.

EARTHWORK NOTES

1. A GEOTECHNICAL ENGINEERING REPORT WAS PREPARED BY EARTH SYSTEMS, DATED JULY 15, 2024 AND IS AVAILABLE FOR VIEWING AT THE DISTRICT'S OFFICE.

Know what's below. Call before you dig.

AGENCY/UTILITY

AGENCY	CONTACT	PHONE NUMBER
CCSD UTILITIES DEPARTMENT MANAGER	JAMES GREEN	(805) 927-6119
COUNTY OF SAN LUIS OBISPO	DANE MUELLER	(805) 788-2959
UNDERGROUND SERVICE ALERT	---	811

SHEET INDEX

SHEET	DRAWING	DESCRIPTION
1	G-001	TITLE SHEET AND LOCATION MAP
2	G-002	NOTES AND SHEET INDEX
3	G-003	SURVEY DATA
4	C-101	DEMOLITION PLAN
5	C-102	GRADING PLAN
6	C-103	SITE PLAN
7	C-104	TANK NO. 2 - PLAN AND SECTION
8	C-105	TANK NO. 1 - PLAN AND SECTION
9	C-501	TANK PIPING DETAILS
10	C-502	TANK OVERFLOW AND DRAIN DETAILS
11	C-503	TANK AND CIVIL DETAILS - I
12	C-504	TANK AND CIVIL DETAILS - II
13	C-505	RETAINING WALL PROFILE
14	C-506	FENCE DETAILS
15	C-507	ANTI-CLIMB DOOR
16	S-001	STRUCTURAL NOTES
17	S-002	STRUCTURAL NOTES
18	S-101	STRUCTURAL SITE PLAN
19	S-201	DETAILS
20	S-202	DETAILS

ABBREVIATIONS

#	NUMBER	HWL	HIGH WATER LEVEL
AB	ANCHOR BOLT	ID	INSIDE DIAMETER
ASCE	AMERICAN SOCIETY OF CIVIL ENGINEERS	INV	INVERT
		LB/LBS	POUNDS
ASTM	AMERICAN SOCIETY FOR TESTING AND MATERIALS	LG	LONG
		MAX	MAXIMUM
AWWA	AMERICAN WATER WORKS ASSOCIATION	MG	MILLION GALLON
		mil	THOUSANDTH OF AN INCH
BFV	BUTTERFLY VALVE	MIN	MINIMUM
℄ OR CL	CENTERLINE	MFR	MANUFACTURER
CAL OSHA	THE DIVISION OF OCCUPATIONAL SAFETY AND HEALTH (DOSH) AT CALIFORNIA	MJ	MECHANICAL JOINT
		N	NORTHING
		NO.	NUMBER
CCSD	CAMBRIA COMMUNITY SERVICES DISTRICT	NPT	NATIONAL PIPE THREAD
		NSF	NATIONAL SANITATION FOUNDATION
CLR	CLEARANCE		
CONT	CONTINUOUS	OC	ON CENTER
CU FT	CUBIC FEET	OD	OUTSIDE DIAMETER
DI	DUCTILE IRON	PP	POLYPROPYLENE
DIA OR Ø	DIAMETER	PUC	PUBLIC UTILITIES COMMISSION
DWG	DRAWING	PVC	POLYVINYL CHLORIDE
E	EASTING	R	RADIUS
(E)	EXISTING	REQ'D	REQUIRED
EC	END OF CURVE	RC	RELATIVE COMPACTION
EG	EXISTING GRADE	S	SLOPE
EL	ELEVATION	SCH	SCHEDULE
EW	EACH WAY	SDR	STANDARD DIMENSION RATIO
FBEL&C	FUSION BONDED EPOXY LINED AND COATED	SQ	SQUARE
		SST	STAINLESS STEEL
FF	FINISHED FLOOR	STD	STANDARD
FG	FINISHED GRADE	TG	TOP OF GRATE
FLG	FLANGE	THK	THICK
FS	FINISHED SURFACE	TOF	TOP OF FOOTING
FT	FEET	TOT	TOTAL
FWY	FREEWAY	TW	TOP OF WALL
GA	GAUGE	TYP	TYPICAL
GALV	GALVANIZED	UE	UNDERGROUND ELECTRICAL
GV	GATE VALVE	UNC	UNIFIED COARSE
HDG	HOT-DIP GALVANIZED		
HDPE	HIGH DENSITY POLYETHYLENE		
HP	HIGH POINT		

LEGEND

PARCEL/PROPERTY LINES
NEW PIPELINE CENTERLINE
OVERHEAD ELECTRICAL LINE
CHAIN LINK FENCE
EDGE OF PAVEMENT
GRADE BREAK
RETAINING WALL
SEWER MAIN
STORM DRAIN MAIN
SWALE
UNDERGROUND ELECTRICAL LINE
WATER MAIN
BURIED PIPE
ABOVE GROUND PIPE

AREA LIGHT
BENCH MARK
CABLE T.V. BOX
CAMERA
DROP INLET AT CURB
DROP INLET
ELECTRIC BOX
FIRE HYDRANT
GAS METER
GUY WIRE
JOINT POLE
MONITORING WELL
PG&E BOX
POWER POLE
SEWER MANHOLE
SEWER CLEANOUT
SIGNAL BOX
SLOPE DIRECTION
STORM DRAIN MANHOLE
STREET LIGHT
TELEPHONE BOX
TELEPHONE MANHOLE
WATER WELL
WATER VALVE
WATER METER

NATIVE EARTH
3/4" CRUSHED ROCK
CLASS II AGGREGATE BASE
CONCRETE
SCARIFY
SAND
GRATING
SCREEN
ASPHALT CONCRETE

REV	DATE	DESCRIPTION	APPR
A			
B			
C			
D			

PROJECT ENGINEER: JON E. HANLON
REG NUMBER: M33232

354 PACIFIC STREET
SAN LUIS OBISPO, CA 93401 (805) 329-4773

CAMBRIA COMMUNITY SERVICES DISTRICT
STUART STREET TANKS REPLACEMENT PROJECT

NOTES AND SHEET INDEX

DESIGNED: JEH
DETAILED: CA
CHECKED: JJR
APPROVED: JEH
DATE: MAY 2025

0 1/2 1
IF THIS BAR DOES NOT MEASURE 1" THEN DRAWING IS NOT TO FULL SCALE

PROJECT NO. -

G-002
SHEET 2 OF 20

DWG: N:\Cambria CSD\Cambria-2024-001 Stuart Street Tanks Replacement\300 Engineering\301 CAD\Plansets\G-002.dwg Layout Name: G-002 - Plotted by: Chris Adams Date: 5/2/2025 - 10:34 AM
XREFS: G-BD IMAGES: CCSD_Logo PNG - G-MMKN.png

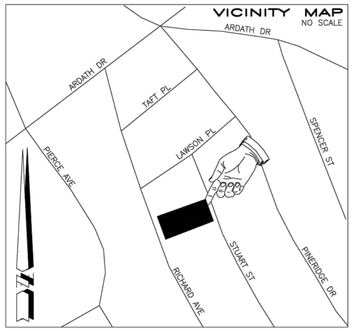

BASIS OF COORDINATES AND BEARINGS:

THE COORDINATES AND BEARINGS AS MEASURED AND SHOWN HEREON ARE ON GRID AND ARE BASED UPON THE NORTH AMERICAN DATUM OF 1983, CCS83, ZONE 5 0405, (2011); SAID COORDINATES AND BEARINGS ARE BASED LOCALLY UPON FIELD-OBSERVED TIES TO NGS CONTROL POINT "WINDSOR".

STATION	NORTHING(ft)	EASTING(ft)	MAPPING ANGLE (GRID TO GEODETIC)	COMBINATION FACTOR (GROUND TO GRID)	ELEV. (NAVD88)	ELLIP.HT.
WINDSOR	2,407,430.05	5,638,536.79	-1°46'10.1"	1.00002794	26.2	-87.82

DISTANCES SHOWN HEREON OR INVERSED FROM COORDINATES SHOWN HEREON ARE IN REFERENCE TO NAD83. TO APPROXIMATE LOCAL GROUND DISTANCES DIVIDE BY THE COMBINATION FACTOR PROVIDED HEREON.

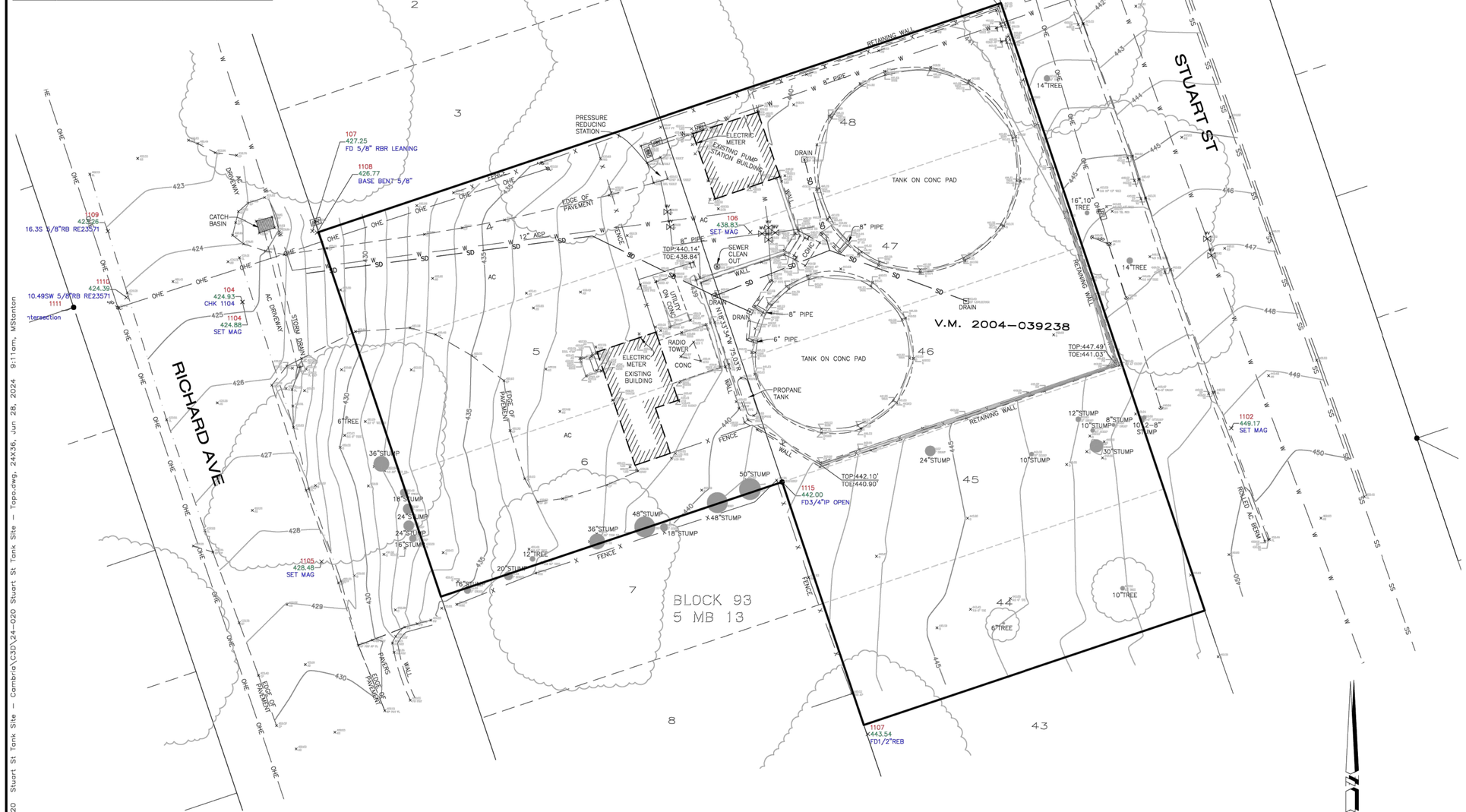

SYMBOL LEGEND:

x	FENCE LINE		RETAINING WALL
SS	SEWER MAIN	PGE	PG&E BOX
w	WATER MAIN	GM	GAS METER
G	GAS MAIN	TEL	TELEPHONE BOX
ETC	ELEC/TELEPHONE/CABLE	SIG	SIGNAL BOX
OHE	CL OF OVERHEAD ELECTRIC BETWEEN POLES	CATV	CABLE T.V. BOX
	DROP INLET AT CURB	ELEC	ELECTRIC BOX
	DROP INLET		TELEPHONE MANHOLE
	STORM DRAIN MANHOLE		STREET LIGHT
	FIRE HYDRANT	JP	JOINT POLE
	WATER WELL	PP	POWER POLE
	WATER VALVE		GUY WIRE
WM	WATER METER		MONITORING WELL
S	SEWER MANHOLE		BENCH MARK
CO	SEWER CLEANOUT		

ABBREVIATIONS

AC	ASPHALT CONCRETE	IP	IRON PIPE
AP	ANGLE POINT	GB	GRADE BREAK
BM	BENCH MARK	GM	GAS METER
BLDG	BUILDING	HP	HIGH POINT
BOW	BACK OF WALK	LT	LIGHT
CB	CATCH BASIN	MH	MANHOLE
CF	CURB FACE	PP	POWER POLE
CO	CLEAN OUT	PVC	POLYVINYL PIPE
COL	COLUMN	RB	REBAR
COR	CORNER	RCP	REINFORCED CONCRETE PIPE
CONC	CONCRETE	R10	CANOPY RADIUS
CMP	CORRUGATED METAL PIPE	SD	STORM DRAIN
CMU	CONCRETE MASONRY UNITS	SL	POINT ON SLOPE
CRN	CROWN OF STREET	SS	SEWER
DI	DROP INLET	STP	STEP
EG	EXISTING GRADE	STR	STAIRS
EP	EDGE OF PAVEMENT	TOP	TOP OF SLOPE
FD	FOUND	TOE	TOE OF SLOPE
FL	FLOW LINE	TW	TOP OF WALL
FF	FINISH FLOOR	W	WATER
FOW	FACE OF WALL	WL	WALL
HSE	HOUSE COR	WM	WATER METER
GR	GRASS	WV	WATER VALVE
GM	GAS METER		
IP	IRON PIPE		

SURVEYOR'S STATEMENT:

THIS MAP REPRESENTS A FIELD SURVEY OF SURFACE FEATURES AND ELEVATIONS PERFORMED ON FEBRUARY 6TH, 2024.

LICENSED LAND SURVEYOR · MICHAEL B. STANTON · LIC. NO. 5702 · STATE OF CALIFORNIA

MICHAEL B. STANTON, PLS 5702 DATE

SURVEYOR'S NOTES:

1. NO TITLE SEARCH (TITLE REPORT) WAS PROVIDED TO THE SURVEYOR. EASEMENTS OR OTHER FEE CONVEYANCES WHICH MAY AFFECT THE SUBJECT PROPERTY HAVE NOT BEEN PLOTTED.

2. ONLY THE SURFACE EVIDENCE OF UNDERGROUND UTILITIES HAVE BEEN MEASURED IN THE FIELD ON THIS SURVEY. IF APPROXIMATE UNDERGROUND ALIGNMENTS ARE SHOWN, I MAKE NO WARRANTY AS TO THE ACTUAL LOCATION, TYPE OR DEPTH OF THOSE UNDERGROUND UTILITIES. CALL UNDERGROUND SERVICE ALERT (USA) AT 1-800-642-2444 TO VERIFY THE ACTUAL LOCATION OF UTILITIES PRIOR TO ANY EXCAVATION. THE SURVEYOR ALSO HAS MADE NO INVESTIGATION AS TO SUBSURFACE ENVIRONMENTAL CONDITIONS THAT WOULD AFFECT THE USE OR DEVELOPMENT OF THIS PROPERTY.

3. IT WILL BE THE ARCHITECT'S RESPONSIBILITY TO VERIFY SETBACK AND HEIGHT RESTRICTIONS WITH THE LOCAL GOVERNING AGENCY.

4. THE SIGNED AND SEALED ORIGINAL DRAWING OF THIS MAP CONSTITUTES THE FINAL WORK PRODUCT. MBS LAND SURVEYS WILL NOT BE LIABLE FOR ELECTRONIC VERSIONS OF THIS MAP PROVIDED TO OTHER PARTIES.

5. THE BOUNDARY LINES SHOWN HEREON WERE COMPILED FROM RECORD INFORMATION (I.E. RECORDED MAPS OR DEEDS) AND ARE NOT INTENDED TO REPRESENT THE TRUE OR ACTUAL BOUNDARY LINES OF THE SUBJECT PROPERTY. TO DETERMINE THE ACTUAL BOUNDARIES OF THE PARCEL WILL REQUIRE A COMPLETE BOUNDARY SURVEY, THE SETTING OF PROPERTY MONUMENTS AND THE FILING OF A CORNER RECORD OR RECORD OF SURVEY IN CONFORMANCE WITH STATE LAW (LS ACT SEC. 8762). APPROXIMATE DIMENSIONAL TIES FROM THE BOUNDARY LINES SHOWN TO PHYSICAL FEATURES (E.G. BUILDINGS, FENCES, WALLS OR TREES, ETC.) SHOWN ON THIS MAP CAN BE DERIVED BY SCALING THE FINISHED WORK PRODUCT WHICH IS PLOTTED AT THE SCALE INDICATED.

POINT TABLE

POINT #	NORTHING	EASTING	ELEVATION	DESCRIPTION
103	2400370.33	5646865.48	441.70	CHK 1103
104	2400305.32	5646684.58	424.93	CHK 1104
1102	2400280.67	5646877.62	449.17	SET MAG
1105	2400254.63	5646700.07	428.48	SET MAG

NOTE:

UTILITY PLANS PROVIDED BY CAMBRIA COMMUNITY SERVICES DISTRICT HAVE NOT BEEN FIELD VERIFIED.

SITE DATA:

ASSESSOR'S PARCEL NO. 024-142-043

VOLUNTARY MERGER PER DOC. NO. 2004-039238

GRAPHIC SCALE
10 0 5 10 20
(IN FEET)
1 inch = 10 ft.

TOPOGRAPHIC MAP
STUART STREET TANK SITE

LOTS 4-6 & 44-48 OF BLOCK 93 OF CAMBRIA PINES MANOR UNIT NO. 4 AS SHOWN ON MAP FILED IN BOOK 5 AT PAGE 13, IN THE CITY OF CAMBRIA, COUNTY OF SAN LUIS OBISPO, CALIFORNIA

AT THE REQUEST OF JON HANLON, PE

MBS LAND SURVEYS
MICHAEL B. STANTON, PLS 5702
3559 SOUTH HIGUERA ST.
SAN LUIS OBISPO, CA 93401
805-594-1960

June 28, 2024 JOB #24-020

REVISION 6-28-2024 ADDED MERGER DOCUMENT

REV	DATE	DESCRIPTION	APPR
A			
B			
C			
D			

PROJECT ENGINEER REG NUMBER

mkn
354 PACIFIC STREET
SAN LUIS OBISPO, CA 93401 (805) 329-4773

CAMBRIA COMMUNITY SERVICES DISTRICT
STUART STREET TANKS REPLACEMENT PROJECT

SURVEY DATA

DESIGNED: ---
DETAILED: ---
CHECKED: ---
APPROVED: ---
DATE: MAY 2025

0 1/2 1
IF THIS BAR DOES NOT MEASURE 1" THEN DRAWING IS NOT TO FULL SCALE

PROJECT NO.
-

G-003
SHEET 3 OF 20

N:\2024\24-020 Stuart St Tank Site - Cambria\C3D\24-020 Stuart St Tank Site - Topo.dwg, 24X36, Jun 28, 2024 9:11am, MStanton

DWG: N:\Cambria CSD\Cambria-2024\001 Stuart Street Tanks Replacement\300 Engineering\301 CAD\Plansets\G-004.dwg Layout Name: 3 G-003 - Plotted by: Chris Askins Date: 5/2/2025 - 10:35 AM
XREFS: G-BD IMAGES: G-MASV prop - CCSD_Logo.PNG - G-MLMKN.png -

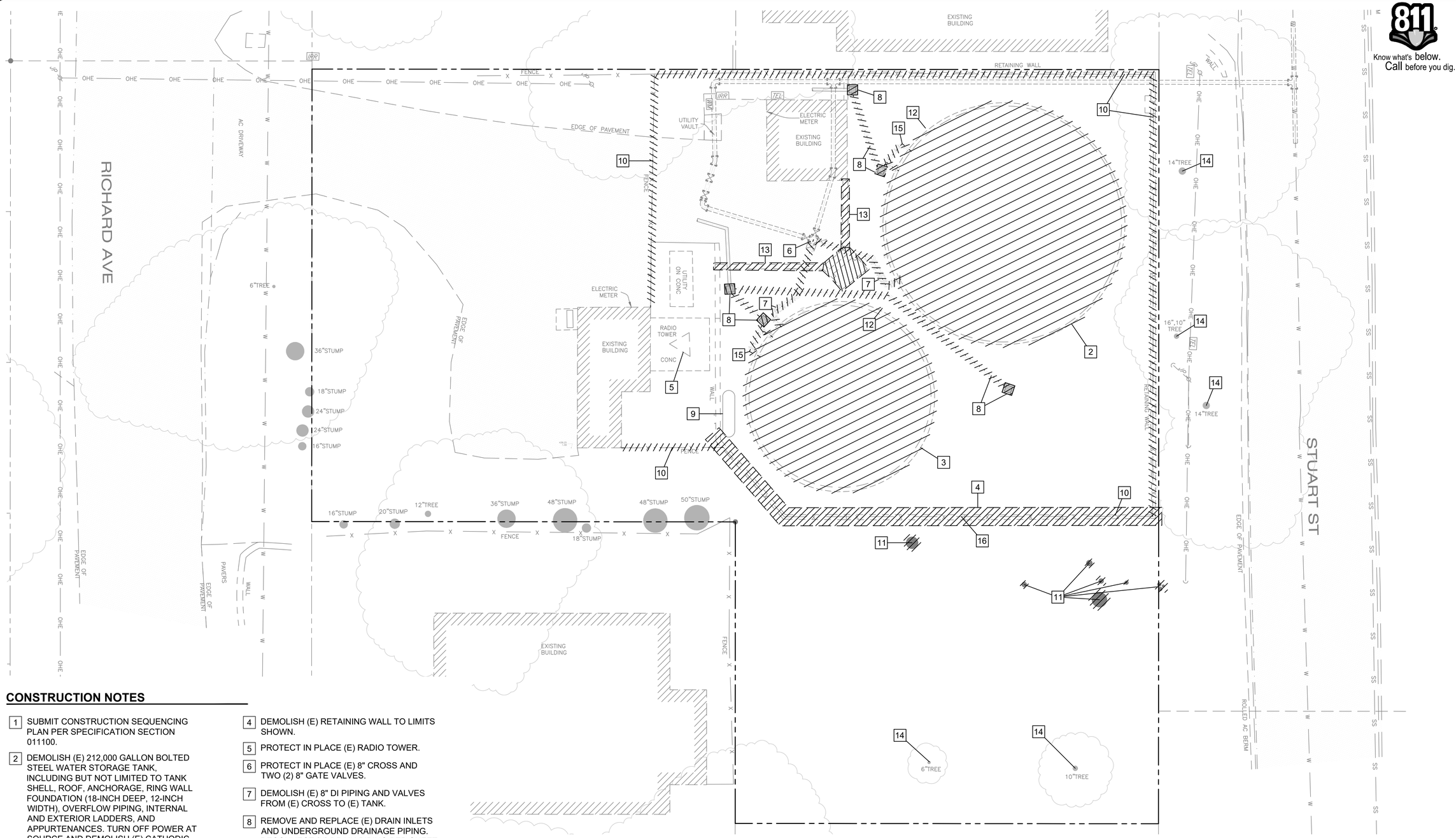

CONSTRUCTION NOTES

1. SUBMIT CONSTRUCTION SEQUENCING PLAN PER SPECIFICATION SECTION 011100.
2. DEMOLISH (E) 212,000 GALLON BOLTED STEEL WATER STORAGE TANK, INCLUDING BUT NOT LIMITED TO TANK SHELL, ROOF, ANCHORAGE, RING WALL FOUNDATION (18-INCH DEEP, 12-INCH WIDTH), OVERFLOW PIPING, INTERNAL AND EXTERIOR LADDERS, AND APPURTENANCES. TURN OFF POWER AT SOURCE AND DEMOLISH (E) CATHODIC PROTECTION SYSTEM TO (E) CONNECTION POINT.
3. DEMOLISH (E) 125,000 GALLON BOLTED STEEL WATER STORAGE TANK, INCLUDING BUT NOT LIMITED TO TANK SHELL, ROOF, ANCHORAGE, RING WALL FOUNDATION (18-INCH DEEP, 12-INCH WIDTH), OVERFLOW PIPING, INTERNAL AND EXTERNAL LADDERS, AND APPURTENANCES. TURN OFF POWER AT SOURCE AND DEMOLISH (E) CATHODIC PROTECTION SYSTEM TO (E) CONNECTION POINT.
4. DEMOLISH (E) RETAINING WALL TO LIMITS SHOWN.
5. PROTECT IN PLACE (E) RADIO TOWER.
6. PROTECT IN PLACE (E) 8" CROSS AND TWO (2) 8" GATE VALVES.
7. DEMOLISH (E) 8" DI PIPING AND VALVES FROM (E) CROSS TO (E) TANK.
8. REMOVE AND REPLACE (E) DRAIN INLETS AND UNDERGROUND DRAINAGE PIPING. RECONNECT (N) DRAIN PIPING PER SHEET C-103.
9. COUNTY-OWNED PROPANE TANK RELOCATED BY OTHERS DURING CONSTRUCTION. COORDINATE WITH DISTRICT AS REQUIRED.
10. DEMO (E) FENCE. FENCE POSTS ALONG NORTH AND EAST RETAINING WALL SHALL REMAIN. PROTECT IN PLACE FRAME OF (E) EAST ACCESS GATE. SECURE SITE WITH TEMPORARY FENCING DURING NON-WORKING HOURS.
11. REMOVE AND DISPOSE OF TREE STUMPS AND ROOT SYSTEMS GREATER THAN 1-INCH IN DIAMETER OR AS NECESSARY TO FACILITATE CONSTRUCTION.
12. EXISTING SCADA AND COUNTY-OWNED ANTENNA TO BE REMOVED AND REINSTALLED BY OTHERS PRIOR TO CONSTRUCTION.
13. DEMOLISH (E) RETAINING WALL, STAIRS, AND RAILING TO EXTENTS SHOWN.
14. PROTECT IN PLACE (E) TREES.
15. DEMOLISH (E) 6" DI PIPING AND VALVES.
16. REMOVE (E) HOSE BIB TO FACILITATE CONSTRUCTION AND REPLACE IN KIND AT CONSTRUCTION COMPLETION. COORDINATE FINAL LOCATION WITH DISTRICT.

LEGEND:

TO BE REMOVED OR ABANDONED IN PLACE AS INDICATED

0 8' 16'
1" = 8'

Know what's below. Call before you dig.

REV	DATE	DESCRIPTION	APPR
A			
B			
C			
D			

PROJECT ENGINEER: JON E. HANLON
REG NUMBER: M33232

REGISTERED PROFESSIONAL ENGINEER JON E. HANLON M33232 MECHANICAL STATE OF CALIFORNIA

mkn
354 PACIFIC STREET
SAN LUIS OBISPO, CA 93401 (805) 329-4773

CAMBRIA COMMUNITY SERVICES DISTRICT
STUART STREET TANKS REPLACEMENT PROJECT

DEMOLITION PLAN

DESIGNED: JEH
DETAILED: CA
CHECKED: JJR
APPROVED: JEH
DATE: MAY 2025

0 1/2 1
IF THIS BAR DOES NOT MEASURE 1" THEN DRAWING IS NOT TO FULL SCALE

PROJECT NO.
-

C-101
SHEET
4 OF 20

DWG: N:\Cambria CSD\Cambria-2024-001 Stuart Street Tanks Replacement\300 Engineering\301 CAD\Plansets\C-101.dwg Layout Name: 4 C-101 - Plotted by: Chris Adkins Date: 5/2/2025 - 1:29 PM
XREFS: G-BD; V-SV; C-XP IMAGES: CCSD_Logo.PNG - G-MMKN.jpg -

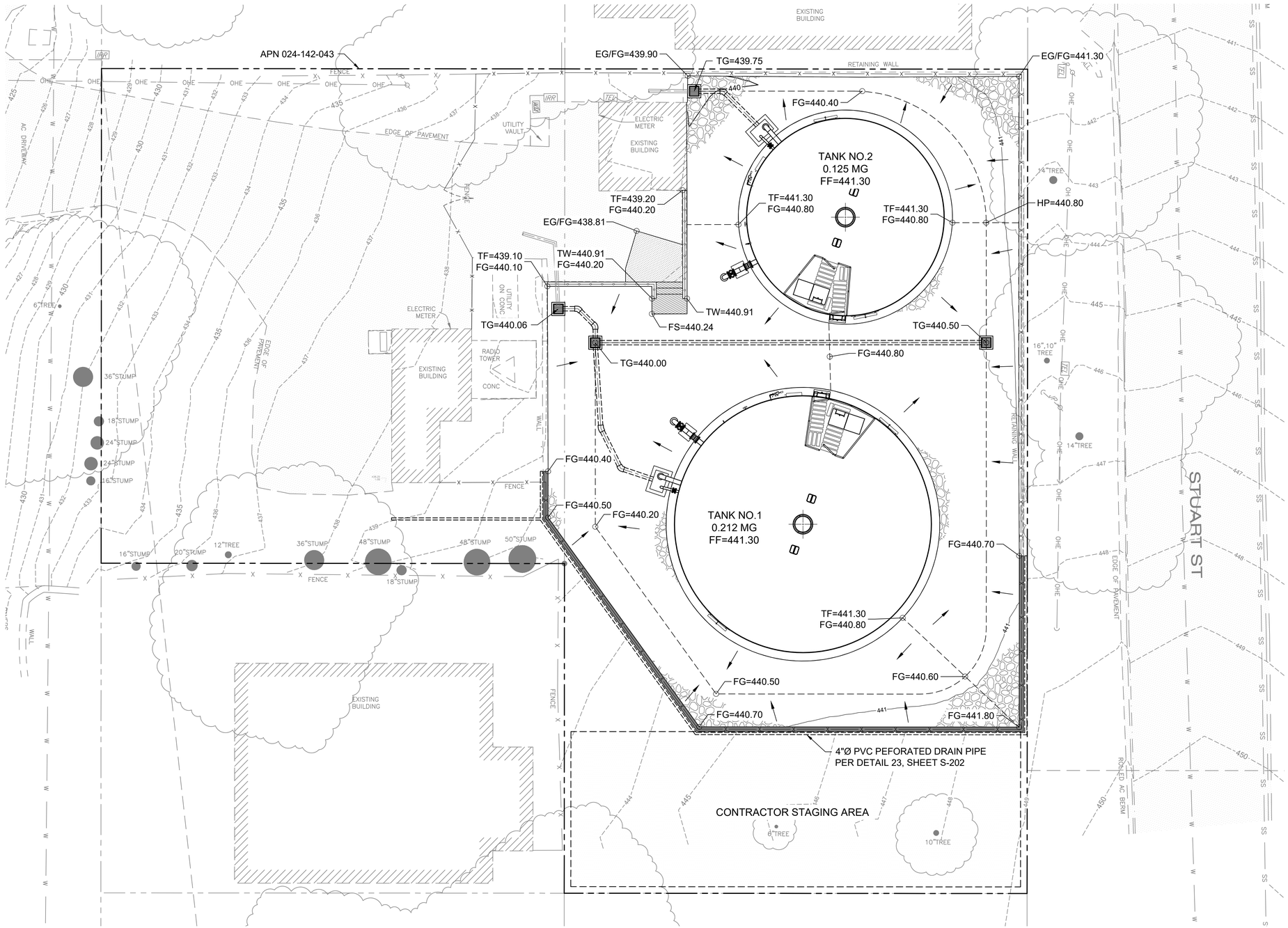

Know what's below. Call before you dig.

NOTES:

1. ALL ELEVATIONS ARE BASED ON THE NORTH AMERICAN DATUM OF 1983, CCS83, ZONE 5 0405, (2011): SAID COORDINATES AND BEARINGS ARE BASED LOCALLY UPON FIELD-OBSERVED TIES TO NGS CONTROL POINT "WINDSOR".
2. CONTRACTOR IS RESPONSIBLE FOR ALL IMPORT AND EXPORT OF EARTH MATERIAL. EARTHWORK IS UNCLASSIFIED. IF NECESSARY, CONDUCT AN INVESTIGATION TO DETERMINE THE SHRINKAGE AND EXPANSION FACTORS. THE CONTRACTOR WILL NOT BE COMPENSATED FOR ADDITIONAL EARTHWORK NOT INCLUDED AT THE TIME OF THE BID.
3. THE CONTRACTOR IS RESPONSIBLE FOR DISPOSAL OF ALL CUT MATERIAL.

ESTIMATED EARTHWORK QUANTITIES:

CUT:	293 CY
FILL:	16 CY
NET:	277 CY (CUT)

QUANTITIES SHOWN ARE APPROXIMATE AND FOR INFORMATION ONLY.

0 8' 16'
1" = 8'

REV	DATE	DESCRIPTION	APPR

PROJECT ENGINEER: JON E. HANLON
REG NUMBER: M33232

REGISTERED PROFESSIONAL ENGINEER JON E. HANLON M33232 MECHANICAL STATE OF CALIFORNIA

mkn
354 PACIFIC STREET
SAN LUIS OBISPO, CA 93401 (805) 329-4773

CAMBRIA COMMUNITY SERVICES DISTRICT
STUART STREET TANKS REPLACEMENT PROJECT

GRADING PLAN

DESIGNED: JEH
DETAILED: CA
CHECKED: JJR
APPROVED: JEH
DATE: MAY 2025

0 1/2 1
IF THIS BAR DOES NOT MEASURE 1" THEN DRAWING IS NOT TO FULL SCALE

PROJECT NO.
-

C-102
SHEET
5 OF 20

DWG: N:\Cambria CSD\Cambria 2024-001 Stuart Street Tanks Replacement\300 Engineering\301 CAD\Plansets\C-102.dwg Layout Name: 5 C-102 - Plotted by: Chris Aakins Date: 5/2/2025 - 2:00 PM
XREFS: G-BD - V-SV - C-LP - C-XP IMAGES: CCSD_Logo.PNG - G-MMKN.png -

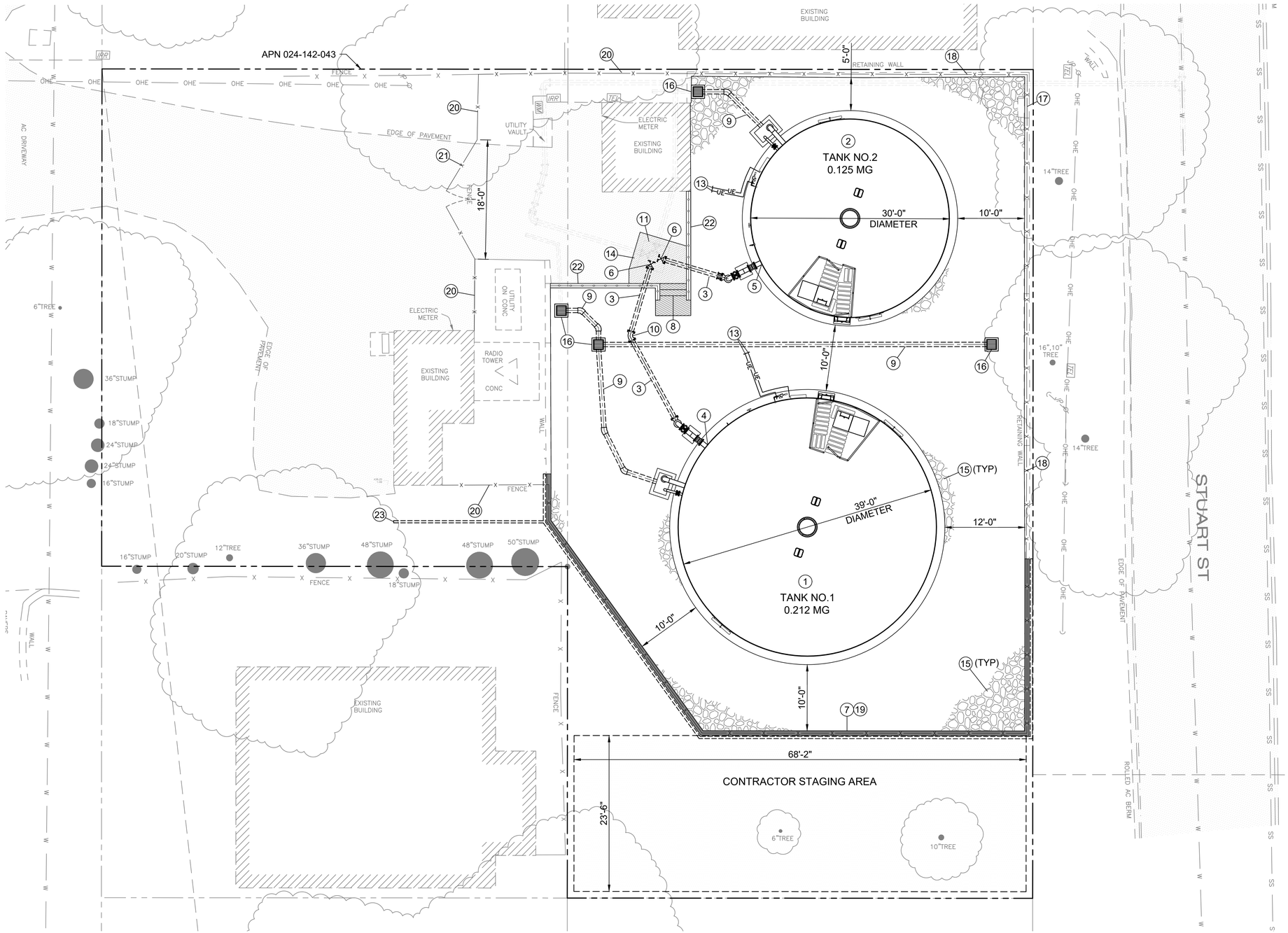

Know what's below. Call before you dig.

CONSTRUCTION NOTES:

1. 0.212 MG AWWA D100 WELDED STEEL WATER STORAGE TANK, SEE SHEET C-105.
2. 0.125 MG AWWA D100 WELDED STEEL WATER STORAGE TANK. SEE SHEET C-104.
3. INSTALL 8-INCH DIP PER SPECIFICATION SECTION 402040.
4. TANK NO.1 CONNECTION PER DETAIL. (1 / C-501)
5. TANK NO. 2 CONNECTION PER DETAIL. (1 / C-501)
6. 8-INCH GATE VALVES, FLGxMJ. VALVE CANS PER SPECIFICATION SECTION 400520H.
7. RETAINING WALL PER DETAIL AND SHEET C-505 (23 / S-202)
8. CONCRETE STAIRS PER DETAIL (43 / S-202)
9. 8-INCH SDR 35 PVC STORM DRAIN. CONNECT TO (E) DRAIN SYSTEM. MINIMUM SLOPE 0.3%.
10. 8-INCH 45° D.I. ELBOW, MJxMJ, RESTRAINED.
11. PROTECT IN PLACE (E) 4'x4'x18" CONCRETE PAD BELOW CROSS.
12. THRUST BLOCK
13. 3/4" PVC CONDUIT AND CONDUCTORS FOR PRESSURE TRANSMITTER AND CATHODIC PROTECTION SYSTEM (4 TOTAL). ROUTE TO EXISTING CONNECTION POINTS AT PUMP BUILDING.
14. REPLACE AC PAVEMENT PER DETAIL. (3 / C-503)
15. 3" THICK CRUSHED ROCK SURFACE FROM TANK FOUNDATIONS TO RETAINING WALLS PER DETAIL. (4 / C-503)
16. 24"x24" POLYPROPYLENE CATCH BASIN AND SQUARE POLYOLEFIN ATRIUM GRATE, NDS 2400, OR EQUAL.
17. INSTALL CHAIN LINK FABRIC, PRIVACY SLATS, AND BARBED WIRE AT EAST ACCESS GATE PER SHEET C-506.
18. 6'-0" CHAIN LINK FENCE ALONG NORTH AND EAST RETAINING WALL PERIMETER PER DETAIL. REUSE (E) FENCE POSTS. (1 / C-506)
19. 6'-0" CHAIN LINK FENCE ALONG (N) RETAINING WALL PER DETAIL. COORDINATE FENCE ELEVATION WITH RETAINING WALL PROFILE ON SHEET C-505. (1 / C-506)
20. 6'-0" CHAIN LINK FENCE AT GRADE PER DETAIL. (3 / C-506)
21. DOUBLE LEAF ACCESS GATE PER DETAIL. (2 / C-506)
22. RETAINING WALL WITH GUARDRAIL PER DETAIL. (44 / S-202)
23. DAYLIGHT 4"Ø PVC RETAINING WALL DRAIN.

TANK	DIAMETER	MAXIMUM OPERATING LEVEL	FREEBOARD	TANK HEIGHT	RINGWALL FOOTING	
					DEPTH	WIDTH
1	39.0 ft	23.0 ft	3.0 ft	26.0 ft	30 in	30 in
2	30.0 ft	23.0 ft	3.0 ft	26.0 ft	30 in	30 in

0 8' 16'
1" = 8'

GENERAL NOTES:

1. SUBMIT CONSTRUCTION SEQUENCING PLAN PER SPECIFICATION SECTION 011100.
2. ALL BURIED DUCTILE IRON PIPE AND FITTINGS SHALL BE MECHANICALLY RESTRAINED PER SPECIFICATION SECTION 402040.
3. ONLY DISTRICT PERSONNEL WILL OPERATE EXISTING VALVES AND EQUIPMENT. COORDINATE WITH DISTRICT AND PROVIDE 72-HOUR NOTICE PER SPECIFICATION SECTION 011100.
4. INSTALL BURIED PIPING PER SPECIFICATION SECTION 312316.
5. SEE SPECIFICATION SECTION 099674 FOR INTERIOR AND EXTERIOR TANK COATINGS. EXTERIOR COATINGS SHALL BE TAN, TNEMEC 67BR OR APPROVED EQUAL.
6. STAGING AREA TO BE RESTORED TO ORIGINAL CONDITION UPON CONSTRUCTION COMPLETION. PROTECT IN PLACE (E) TREES DURING CONSTRUCTION.
7. MATERIALS SHALL NOT BE STOCKPILED WITHIN 15 FEET OF ANY TREE. STOCKPILED MATERIALS SHALL BE REMOVED BEFORE FINAL INSPECTION. SHOULD ANY EXISTING VEGETATION BE DISTURBED, REVEGETATE WITH NATIVE, DROUGHT AND FIRE-RESISTANT SPECIES CONSISTENT WITH FIRE SAFETY STANDARDS.

REV	DATE	DESCRIPTION	APPR

PROJECT ENGINEER: JON E. HANLON
REG NUMBER: M33232

REGISTERED PROFESSIONAL ENGINEER JON E. HANLON M33232 MECHANICAL STATE OF CALIFORNIA

mkn
354 PACIFIC STREET
SAN LUIS OBISPO, CA 93401 (805) 329-4773

CAMBRIA COMMUNITY SERVICES DISTRICT
STUART STREET TANKS REPLACEMENT PROJECT

SITE PLAN

DESIGNED: JEH
DETAILED: CA
CHECKED: JJR
APPROVED: JEH
DATE: MAY 2025

0 1/2 1
IF THIS BAR DOES NOT MEASURE 1" THEN DRAWING IS NOT TO FULL SCALE

PROJECT NO. -

C-103
SHEET 6 OF 20

DWG: N:\Cambria CSD\Cambria-2024-001 Stuart Street Tanks Replacement\300 Engineering\301 CAD\Plansets\C-103.dwg Layout Name: 6 C-103 - Plotted by: Chris Askins Date: 5/2/2025 - 1:43 PM
XREFS: G-BD - V-SV - C-LP - C-XP IMAGES: CCSD_Logo.PNG - G-MMON.png

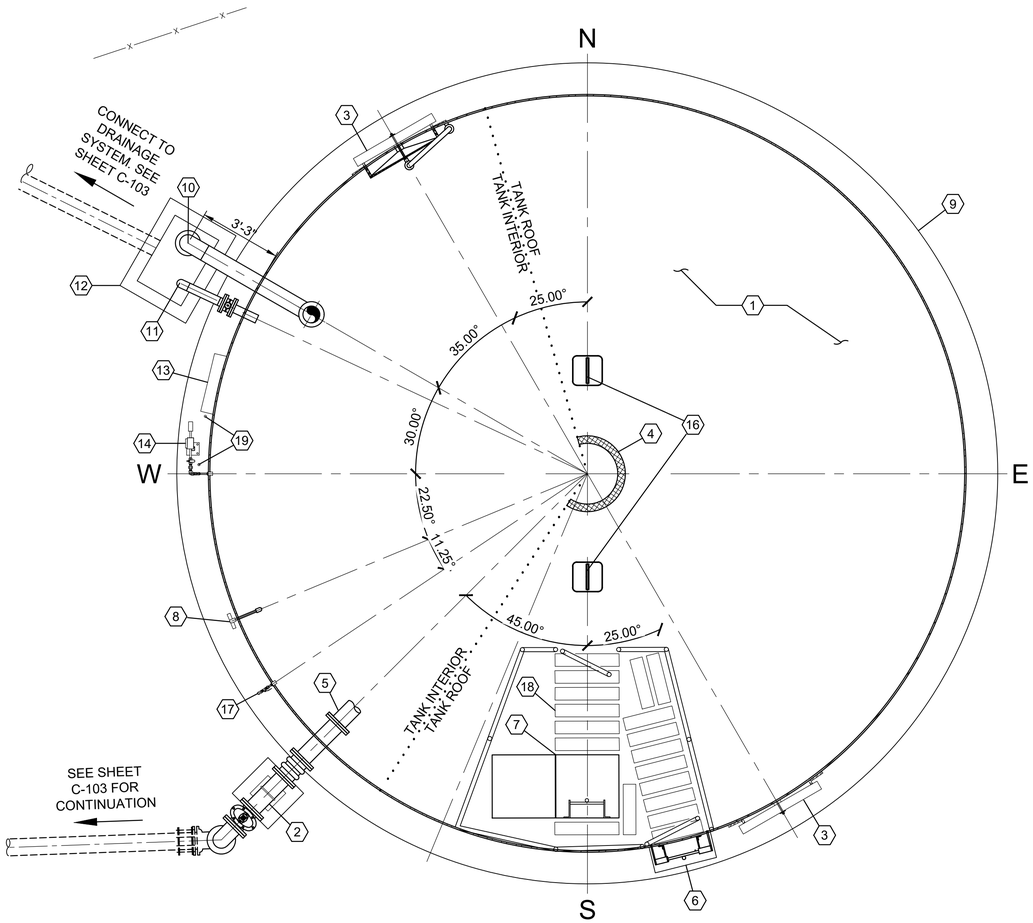

TANK NO. 2 - PLAN VIEW

1 / -

SCALE: 1" = 3'

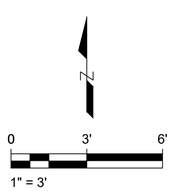

CONSTRUCTION NOTES:

1. 30'-0" DIAMETER WELDED STEEL TANK PER SPECIFICATION SECTION 331611.
2. 8"Ø TANK INLET/OUTLET PER DETAIL — 1 / C-501
3. 30" DIAMETER MANWAY PER DETAIL — 1 / C-503
4. TANK VENT PER SPECIFICATION SECTION 331611
5. HYDRODYNAMIC MIXING SYSTEM PER SPECIFICATION SECTION 400765
6. EXTERIOR LADDER AND HAND RAILS PER SPECIFICATION SECTION 331611 AND DETAIL — 1 / C-504
7. ACCESS HATCH AND INTERIOR LADDER PER SPECIFICATION SECTION 331611 AND DETAIL — 1 / C-504
8. LEVEL GAUGE PER SPECIFICATION SECTION 331611
9. TANK FOUNDATION PER SHEET S-101
10. TANK OVERFLOW PER DETAIL — 1 / C-502
11. TANK DRAIN PER DETAIL — 1 / C-502
12. TANK OVERFLOW CATCH BASIN PER DETAIL — 1 / C-502
13. CATHODIC PROTECTION SYSTEM PER SPECIFICATION SECTION 264226. CONNECT PER CONSTRUCTION NOTE 13 ON SHEET C-103.
14. PRESSURE TRANSDUCER ASSEMBLY PER DETAIL — 2 / C-503
    CONNECT PER CONSTRUCTION NOTE 3 ON SHEET C-103.
16. TIE OFF POINT PER DETAIL — 4 / C-504
17. SAMPLE PORT PER DETAIL — 3 / C-502
18. NON-SKID SURFACE PRESS-ON TYPE 6" WIDE STRIPS AT 8" OC (TYP.)
19. CONDUIT PENETRATION THROUGH FOUNDATION PER DETAIL — 2 / C-504

Know what's below. Call before you dig.

GENERAL NOTES:

1. SEE SPECIFICATION SECTION 099674 FOR INTERIOR AND EXTERIOR TANK COATINGS. EXTERIOR COATINGS SHALL BE TAN, TNEMEC 67BR OR APPROVED EQUAL.
2. SEE SHEET C-103 FOR SITE PIPING.
3. SEE STRUCTURAL SHEET S-101 FOR TANK FOUNDATION REQUIREMENTS.
4. SEE SPECIFICATION SECTION 312300 FOR BACKFILL AND COMPACTION REQUIREMENTS.

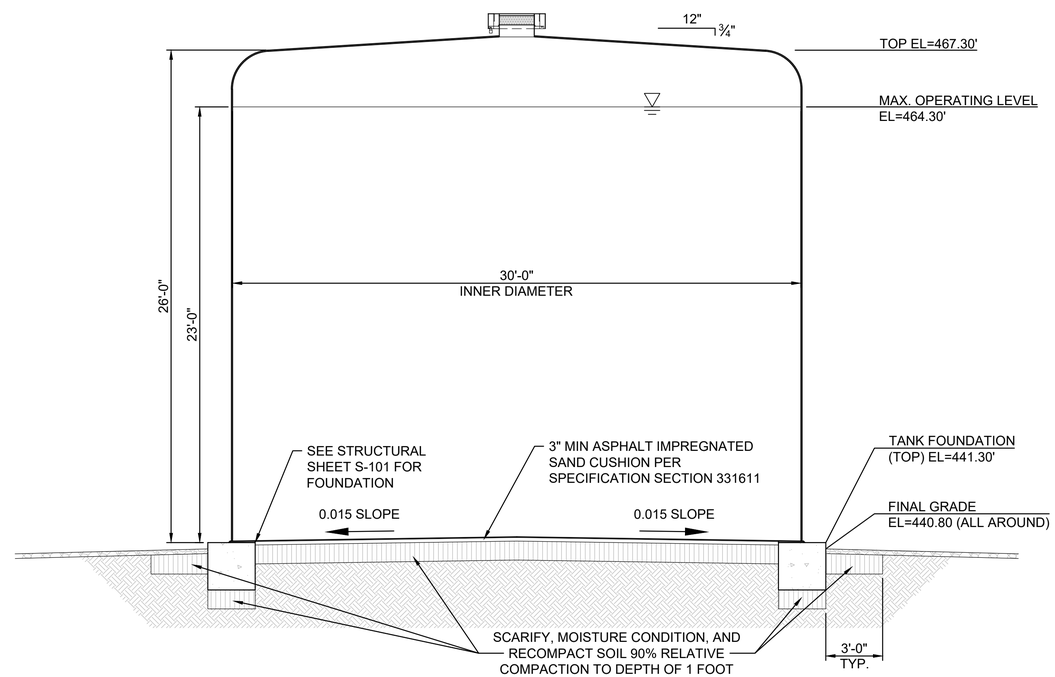

TANK NO. 2 - SECTION

A / -

SCALE: 1" = 4'

REV	DATE	DESCRIPTION	APPR
A			
A			
A			
A			

PROJECT ENGINEER: JON E. HANLON
REG NUMBER: M33232

REGISTERED PROFESSIONAL ENGINEER — JON E. HANLON — M33232 — MECHANICAL — STATE OF CALIFORNIA

mkn
354 PACIFIC STREET
SAN LUIS OBISPO, CA 93401 (805) 329-4773

CAMBRIA COMMUNITY SERVICES DISTRICT
STUART STREET TANKS REPLACEMENT PROJECT

TANK NO. 2 - PLAN AND SECTION

DESIGNED: JEH
DETAILED: CA
CHECKED: JJR
APPROVED: JEH
DATE: MAY 2025

0 1/2 1
IF THIS BAR DOES NOT MEASURE 1" THEN DRAWING IS NOT TO FULL SCALE

PROJECT NO. -

C-104
SHEET 7 OF 20

DWG: N:\Cambria CSD\Cambria-2024-001 Stuart Street Tanks Replacement\300 Engineering\301 CAD\Plansets\C-104 & C-105.dwg Layout Name: 7 C-104 - Plotted by: Chris Askins Date: 5/2/2025 - 10:38 AM
XREFS: G-BD - VSY - CLP IMAGES: CCSD_Logo.PNG - G-IMAWN.png -

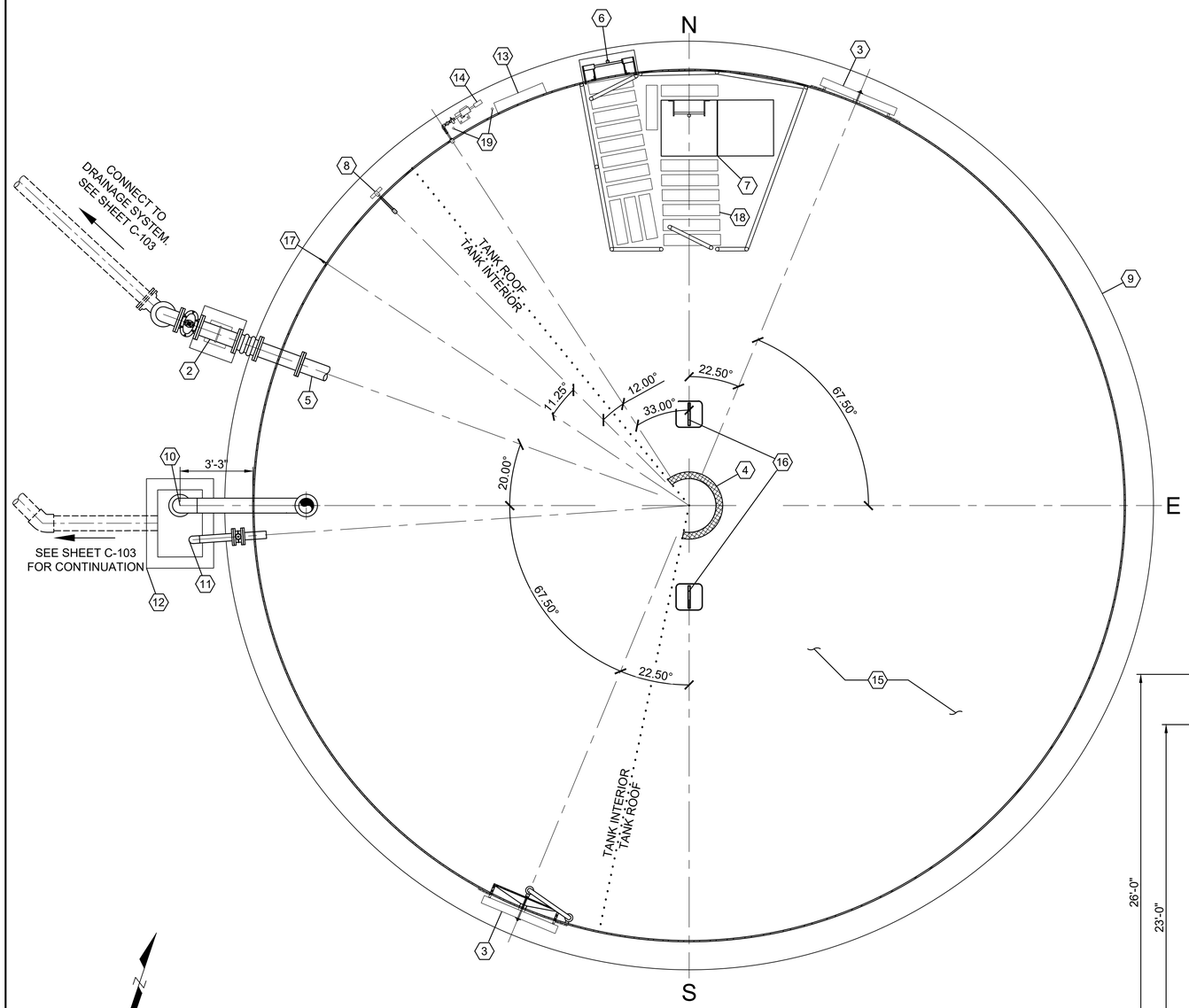

0 3' 6'
1" = 3'

TANK NO. 1 - PLAN VIEW

SCALE: 1" = 3'

1 / -

CONSTRUCTION NOTES:

2	8"Ø TANK INLET/OUTLET PER DETAIL	1 / C-501
3	30" DIAMETER MANWAY PER DETAIL	1 / C-503
4	TANK VENT PER SPECIFICATION SECTION 331611	
5	HYDRODYNAMIC MIXING SYSTEM PER SPECIFICATION SECTION 400765	
6	EXTERIOR LADDER AND HAND RAILS PER SPECIFICATION SECTION 331611 AND DETAIL	1 / C-504
7	ACCESS HATCH AND INTERIOR LADDER PER SPECIFICATION SECTION 331611 AND DETAIL	1 / C-504
8	LEVEL GAUGE PER SPECIFICATION SECTION 331611	
9	TANK FOUNDATION PER SHEET S-101	
10	TANK OVERFLOW PER DETAIL	1 / C-502
11	TANK DRAIN PER DETAIL	1 / C-502
12	TANK OVERFLOW CATCH BASIN PER DETAIL	1 / C-502
13	CATHODIC PROTECTION SYSTEM PER SPECIFICATION SECTION 264226. CONNECT PER CONSTRUCTION NOTE 13 ON SHEET C-103.	
14	PRESSURE TRANSDUCER ASSEMBLY PER DETAIL CONNECT PER CONSTRUCTION NOTE 3 ON SHEET C-103.	2 / C-503
15	39'-0" DIAMETER WELDED STEEL TANK PER SPECIFICATION SECTION 331611.	
16	TIE OFF POINT PER DETAIL	4 / C-504
17	SAMPLE PORT PER DETAIL	3 / C-502
18	NON-SKID SURFACE PRESS-ON TYPE 6" WIDE STRIPS AT 8" OC (TYP.)	
19	CONDUIT PENETRATION THROUGH FOUNDATION PER DETAIL	2 / C-504

Know what's below. Call before you dig.

GENERAL NOTES:

1. SEE SPECIFICATION SECTION 099674 FOR INTERIOR AND EXTERIOR TANK COATINGS. EXTERIOR COATINGS SHALL BE TAN, TNEMEC 67BR OR APPROVED EQUAL.
2. SEE SHEET C-103 FOR SITE PIPING.
3. SEE STRUCTURAL SHEET S-101 FOR TANK FOUNDATION REQUIREMENTS.
4. SEE SPECIFICATION SECTION 312300 FOR BACKFILL AND COMPACTION REQUIREMENTS.

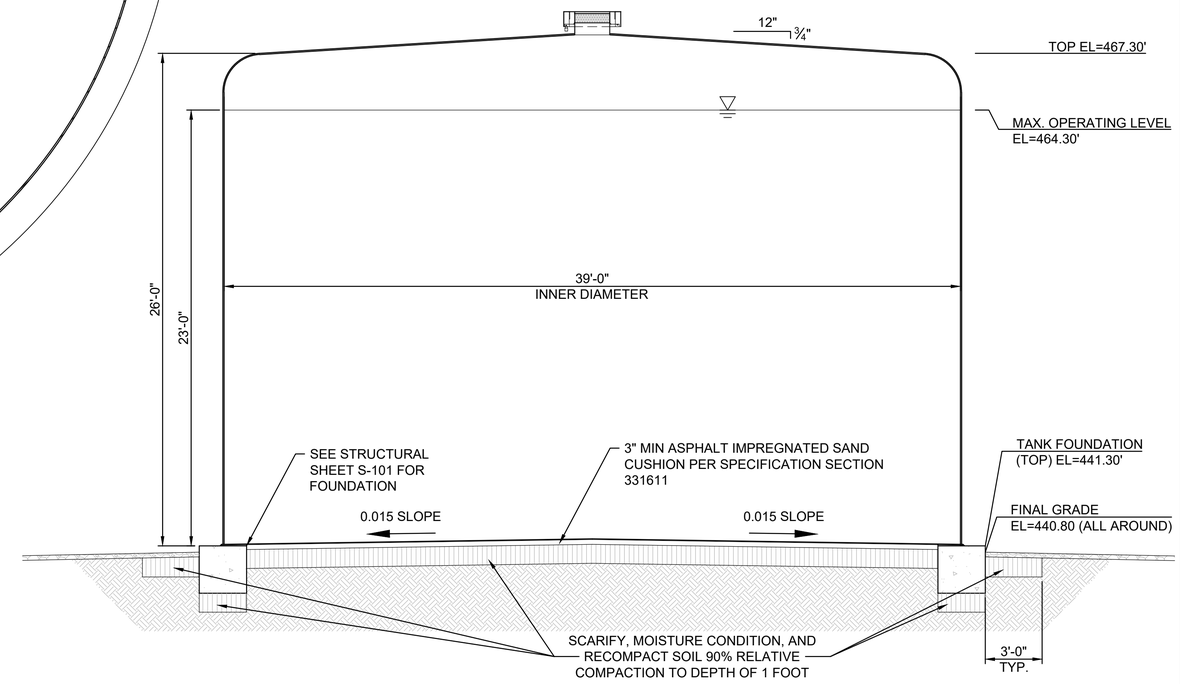

TANK NO. 1 - SECTION

SCALE: 1" = 4'

A / -

REV	DATE	DESCRIPTION	APPR
A			
A			
A			
A			

PROJECT ENGINEER: JON E. HANLON
REG NUMBER: M33232

REGISTERED PROFESSIONAL ENGINEER JON E. HANLON M33232 MECHANICAL STATE OF CALIFORNIA

mkn
354 PACIFIC STREET
SAN LUIS OBISPO, CA 93401 (805) 329-4773

CAMBRIA COMMUNITY SERVICES DISTRICT
STUART STREET TANKS REPLACEMENT PROJECT

TANK NO. 1 - PLAN AND SECTION

DESIGNED: JEH
DETAILED: CA
CHECKED: JJR
APPROVED: JEH
DATE: MAY 2025

0 1/2 1
IF THIS BAR DOES NOT MEASURE 1" THEN DRAWING IS NOT TO FULL SCALE

PROJECT NO.
-

C-105
SHEET
8 OF 20

DWG: N:\Cambria CSD\Cambria-2024-001 Stuart Street Tank Replacement\300 Engineering\301 CAD\Planset\C-104 & C-105.dwg Layout Name: 8 C-105 - Plotted by: Chris Adams Date: 5/2/2025 - 10:38 AM
XREFS: G-BD - V-SV - C-LP IMAGES: CCSD_Logo.PNG - G-IMMKN.png -

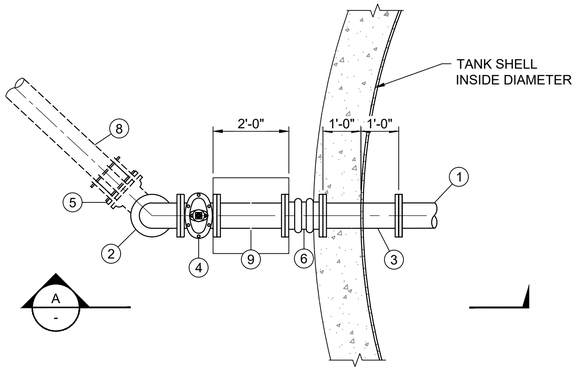

8" INLET/OUTLET PLAN

SCALE: 1" = 2'

1 -

8" INLET/OUTLET MATERIAL LIST

1. HYDRODYNAMIC MIXING SYSTEM PER SPECIFICATION SECTION 400765
2. 8" 90° DI ELBOW, FLGxFLG
3. 8"Ø STEEL SPOOL, NOZZLE PER TANK MFR
4. 8" DI GATE VALVE, FLGxFLG
5. 8" 90° ELBOW, MJxMJ, RESTRAINED
6. 8" DOUBLE-SPHERE RUBBER EXPANSION JOINT PROCO STYLE 242 OR APPROVED NSF 61 CERTIFIED EQUAL
7. 8"Ø DI SPOOL, FLGxPE
8. 8"Ø DI PIPE
9. PIPE SUPPORT PER DETAIL 2 -

PIPE DIA. (in)	'A'	'B'	'C'	'D'	'E'	
					MIN.	MAX.
8	3	6⅞	9	2½	11¾	16½

NOTES:

1. SEE TABLE FOR BASE, HEIGHT, & FLANGE DIMENSIONS.
2. SUPPORTS SHALL BE ZINC PLATED AT PLACE OF MANUFACTURE

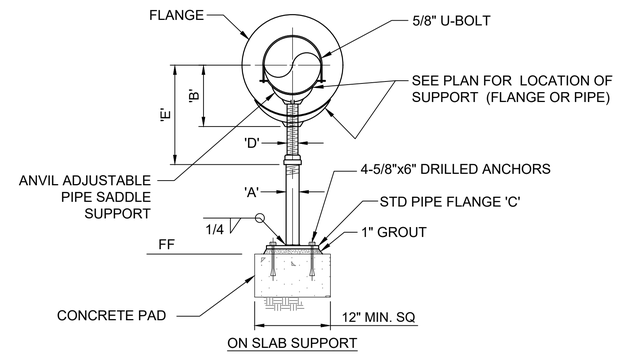

PIPE SUPPORT

NOT TO SCALE

2 -

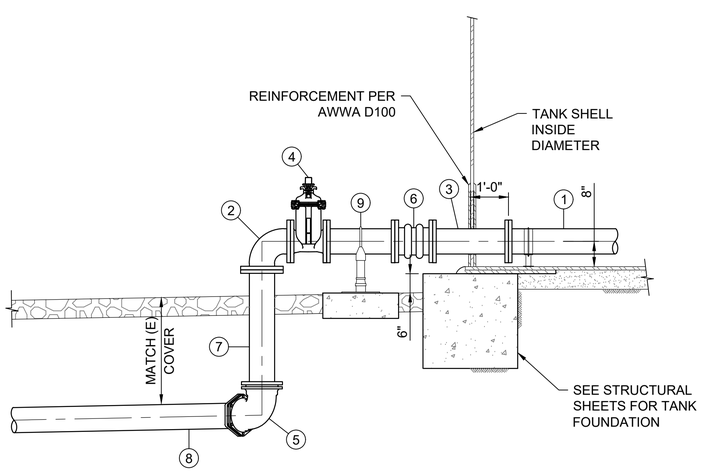

8" INLET/OUTLET SECTION

SCALE: 1" = 2'

A -

Know what's below. Call before you dig.

REV	DATE	DESCRIPTION	APPR

PROJECT ENGINEER: JON E. HANLON
REG NUMBER: M33232

REGISTERED PROFESSIONAL ENGINEER JON E. HANLON M33232 MECHANICAL STATE OF CALIFORNIA

354 PACIFIC STREET
SAN LUIS OBISPO, CA 93401 (805) 329-4773

CAMBRIA COMMUNITY SERVICES DISTRICT
STUART STREET TANKS REPLACEMENT PROJECT

TANK PIPING DETAILS

DESIGNED: JEH
DETAILED: CA
CHECKED: JJR
APPROVED: JEH
DATE: MAY 2025

0 1/2 1

IF THIS BAR DOES NOT MEASURE 1" THEN DRAWING IS NOT TO FULL SCALE

PROJECT NO.
-

C-501

SHEET 9 OF 20

DWG: N:\Cambria CSD\Cambria-2024-001 Stuart Street Tanks Replacement\300 Engineering\301 CAD\Plansets\C-501.dwg Layout Name: 9 C-501 - Plotted by: Chris Adkins Date: 5/2/2025 - 10:39 AM
XREFS: G-BD - C-LP IMAGES: CCSD_Logo.PNG - G-MMKN.png -

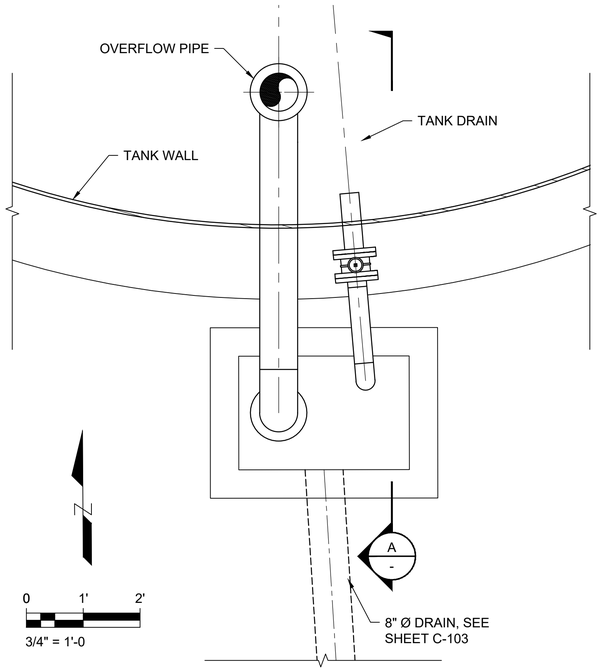

OVERFLOW AND DRAIN PLAN

SCALE: 3/4" = 1'-0"

1
-

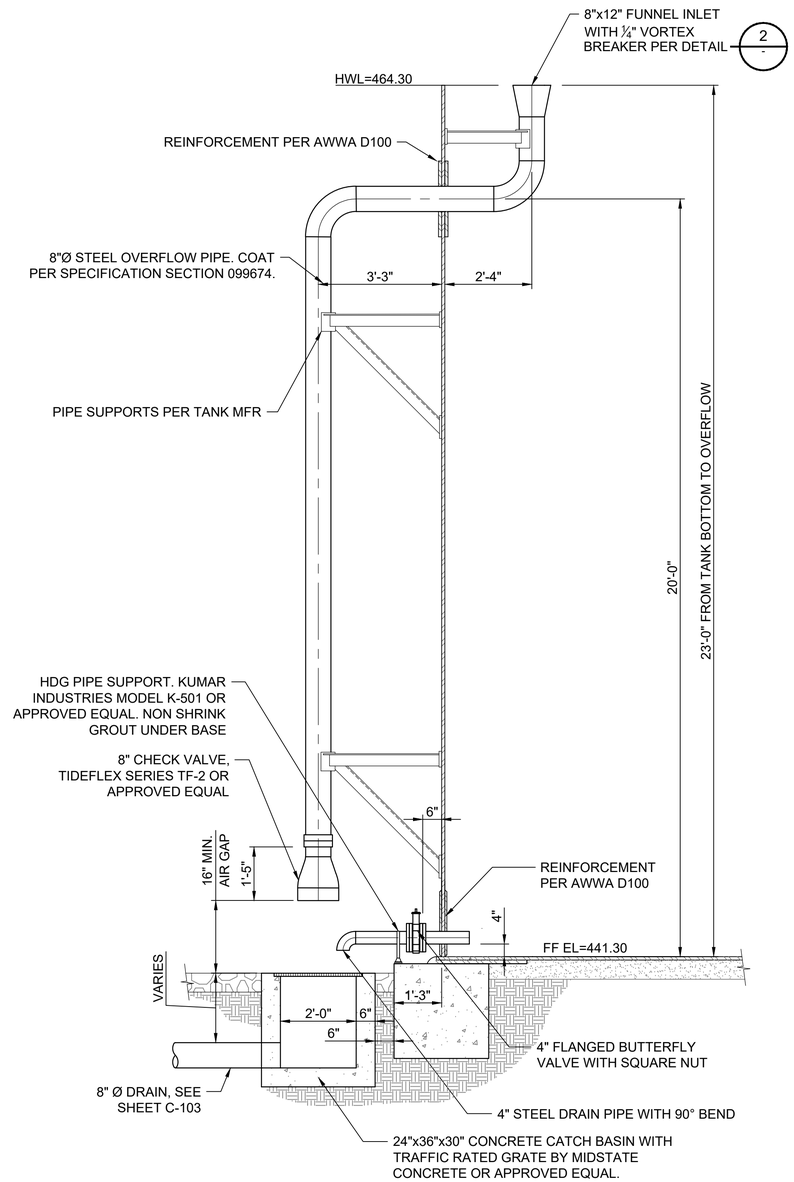

OVERFLOW AND DRAIN SECTION

SCALE: 1/2" = 1'-0"

A
-

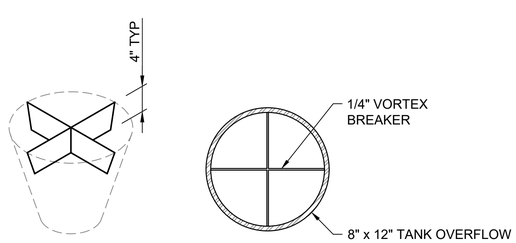

FUNNEL INLET
INSTALLATION

VORTEX BREAKER

NOT TO SCALE

2
-

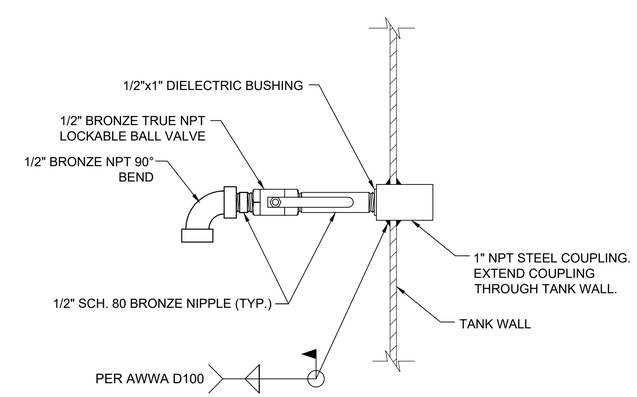

SAMPLE PORT

NOT TO SCALE

3
-

Know what's below.
Call before you dig.

REV	DATE	DESCRIPTION	APPR
A			
A			
A			
A			

PROJECT ENGINEER: JON E. HANLON
REG NUMBER: M33232

REGISTERED PROFESSIONAL ENGINEER
JON E. HANLON
M33232
MECHANICAL
STATE OF CALIFORNIA

mkn
354 PACIFIC STREET
SAN LUIS OBISPO, CA 93401 (805) 329-4773

CAMBRIA COMMUNITY SERVICES DISTRICT
STUART STREET TANKS REPLACEMENT PROJECT

TANK OVERFLOW AND DRAIN DETAILS

DESIGNED: JEH
DETAILED: CA
CHECKED: JJR
APPROVED: JEH
DATE: MAY 2025

0 1/2 1
IF THIS BAR DOES NOT MEASURE 1" THEN DRAWING IS NOT TO FULL SCALE

PROJECT NO.
-

C-502
SHEET
10 OF 20

DWG: N:\Cambria CSD\Cambria-2024-001 Stuart Street Tanks Replacement\300 Engineering\301 CAD\Plansets\C-502.dwg Layout Name: 10 C-502 - Plotted by: Chris Adkins Date: 5/2/2025 - 2:19 PM
XREFS: G-BD - C-LP IMAGES: CCSD_Logo.PNG - G-MLMN.png -

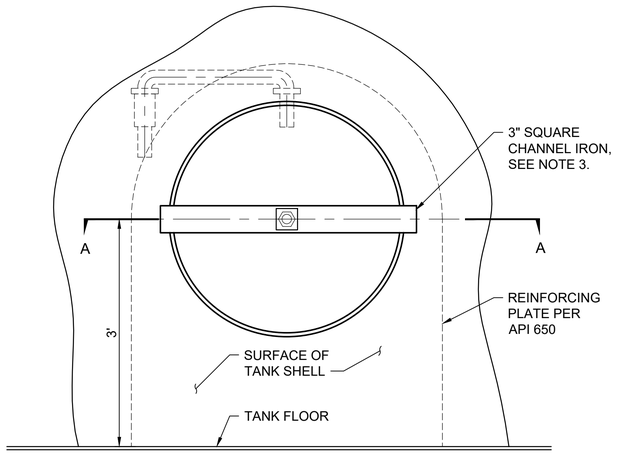

ELEVATION

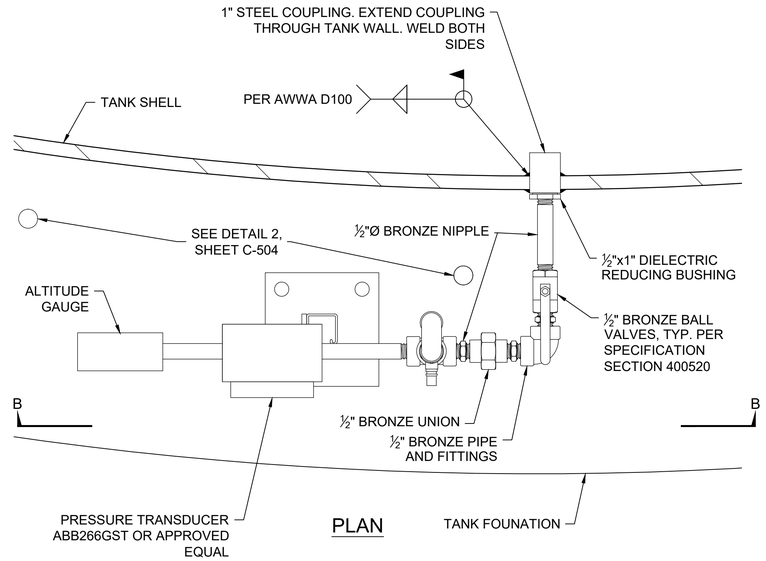

PLAN

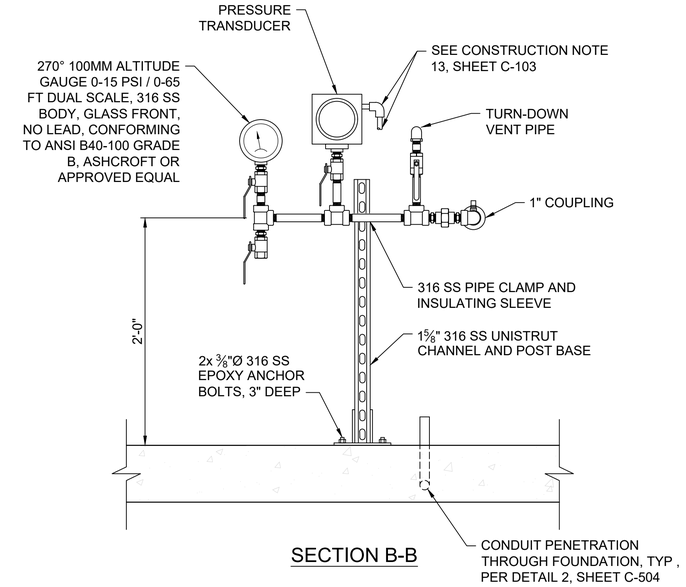

SECTION B-B

PRESSURE TRANSDUCER ASSEMLBY

NOT TO SCALE

2
-

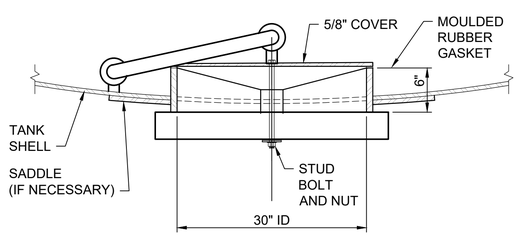

SECTION A-A

NOTES:

1. PROVIDE SHOP DRAWINGS FOR APPROVAL.
2. CONTRACTOR TO DETERMINE WELD SIZES.
3. COAT PER SPECIFICATION SECTION 099674

SWING-TYPE MANWAY, TWO REQUIRED

NOT TO SCALE

1
-

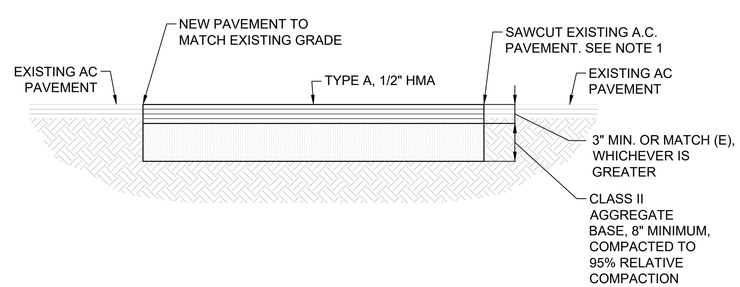

NOTE:

APPLY TACK COAT TO EDGE OF EXISTING A.C. PAVEMENT.

AC PAVING DETAIL

NOT TO SCALE

3
-

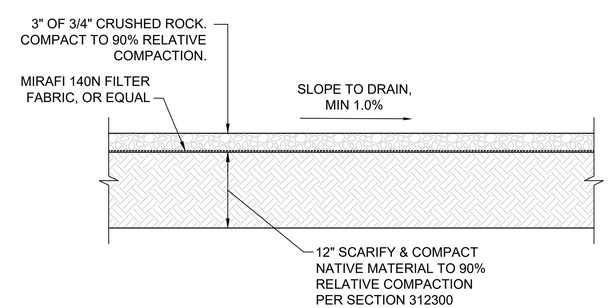

CRUSHED ROCK SURFACE SECTION

NOT TO SCALE

4
-

Know what's below. Call before you dig.

REV	DATE	DESCRIPTION	APPR
A			
A			
A			
A			

PROJECT ENGINEER: JON E. HANLON
REG NUMBER: M33232

REGISTERED PROFESSIONAL ENGINEER JON E. HANLON M33232 MECHANICAL STATE OF CALIFORNIA

mkn
354 PACIFIC STREET
SAN LUIS OBISPO, CA 93401 (805) 329-4773

CAMBRIA COMMUNITY SERVICES DISTRICT
STUART STREET TANKS REPLACEMENT PROJECT

TANK AND CIVIL DETAILS - I

DESIGNED: JEH
DETAILED: CA
CHECKED: JJR
APPROVED: JEH
DATE: MAY 2025

0 1/2 1
IF THIS BAR DOES NOT MEASURE 1" THEN DRAWING IS NOT TO FULL SCALE

PROJECT NO.
-

C-503
SHEET
11 OF 20

DWG: N:\Cambria CSD\Cambria-2024-001 Stuart Street Tanks Replacement\300 Engineering\301 CAD\Plansets\C-503.dwg Layout Name: 11 C-503 - Plotted by: Chris Adkins Date: 5/2/2025 - 10:41 AM
XREFS: G-BD - C-LP IMAGES: CCSD_Logo.PNG - G-MA-MKN.png -

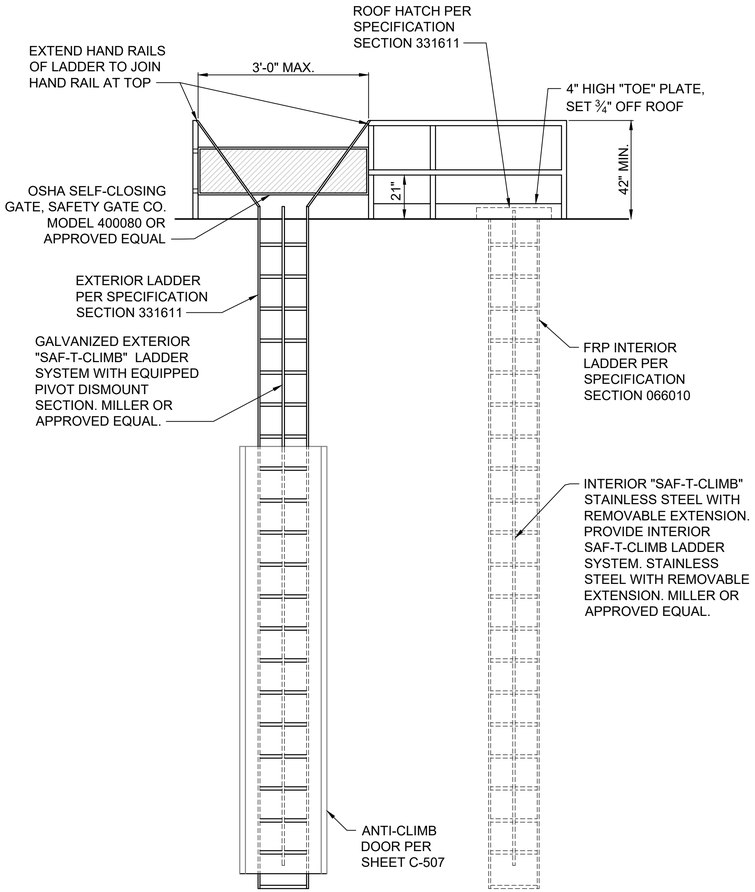

LADDERS - PROFILES

NOT TO SCALE

1 / -

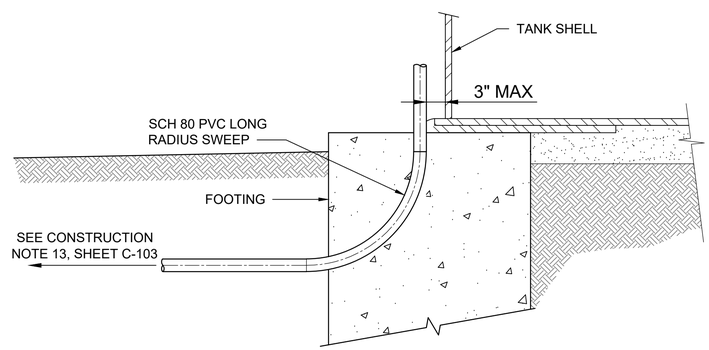

TYPICAL CONDUIT RISER

SCALE: NTS

2 / -

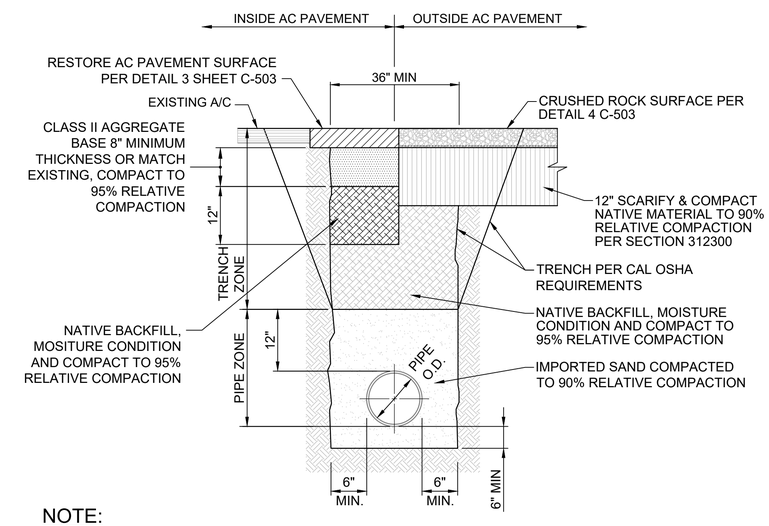

NOTE:

SEE SPECIFICATION SECTION 312316 FOR EARTHWORK REQUIREMENTS.

TRENCH DETAIL

NOT TO SCALE

3 / -

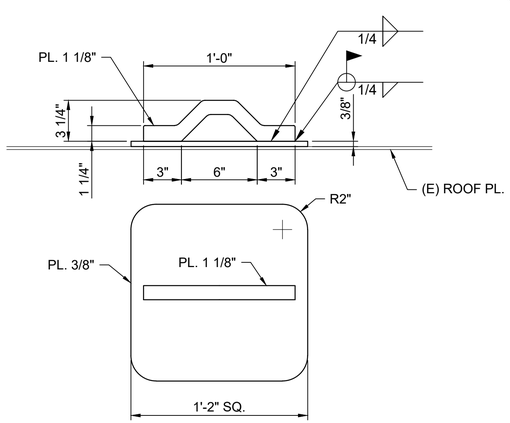

ROOF TIE OFF DETAIL

NOT TO SCALE

4 / -

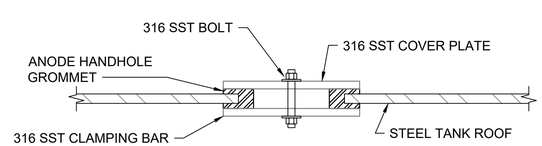

SECTION

NOTES:

1. COVER, CLAMPING BAR, AND OTHER HARDWARE SHALL BE 316 STAINLESS STEEL FAR WEST CORROSION HAND HOLE GROMMET AND MODEL HH-3, OR EQUAL.
2. ANODE HANDHOLE LOCATIONS AND REQUIRED QUANTITY TO BE DETERMINED BY TANK MFR.

ANODE HANDHOLE COVER

NOT TO SCALE

5 / -

Know what's below. Call before you dig.

REV	DATE	DESCRIPTION	APPR
△			
△			
△			
△			

PROJECT ENGINEER: JON E. HANLON
REG NUMBER: M33232

REGISTERED PROFESSIONAL ENGINEER JON E. HANLON M33232 MECHANICAL STATE OF CALIFORNIA

mkn
354 PACIFIC STREET
SAN LUIS OBISPO, CA 93401 (805) 329-4773

CAMBRIA COMMUNITY SERVICES DISTRICT
STUART STREET TANKS REPLACEMENT PROJECT

TANK AND CIVIL DETAILS - II

DESIGNED: JEH
DETAILED: CA
CHECKED: JJR
APPROVED: JEH
DATE: MAY 2025

0 1/2 1
IF THIS BAR DOES NOT MEASURE 1" THEN DRAWING IS NOT TO FULL SCALE

PROJECT NO. -

C-504
SHEET 12 OF 20

DWG: N:\Cambria CSD\Cambria 2024-001 Stuart Street Tanks Replacement\300 Engineering\301 CAD\Plansets\C-504.dwg Layout Name: 12 C-504 - Plotted by: Chris Askins Date: 5/2/2025 - 1:58 PM
XREFS: G-BD IMAGES: CCSD_Logo.PNG - G-MMKN.png

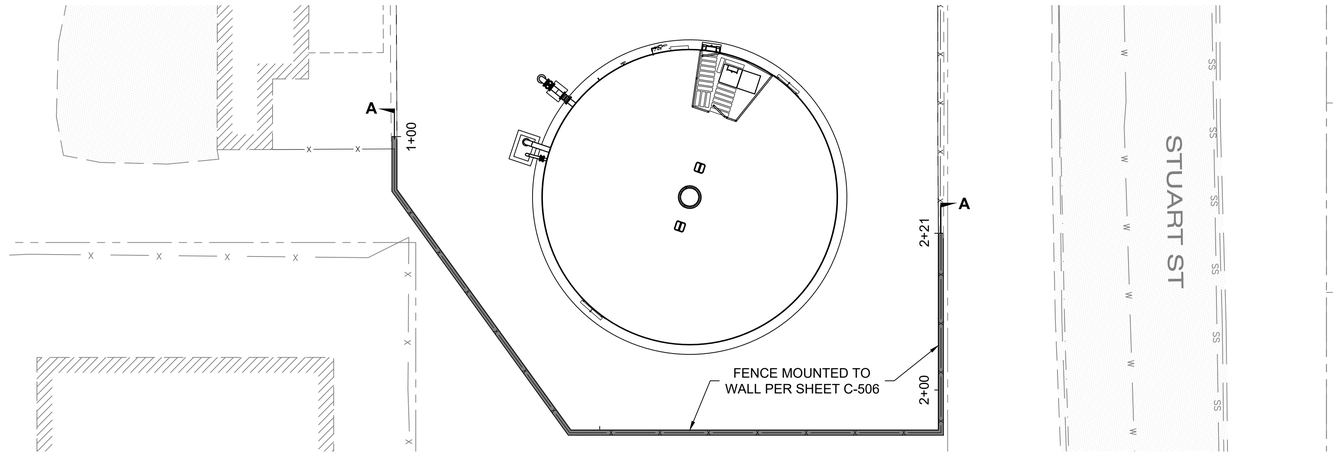

SOUTH RETAINING WALL PLAN

SCALE: 1"=10'

1 / -

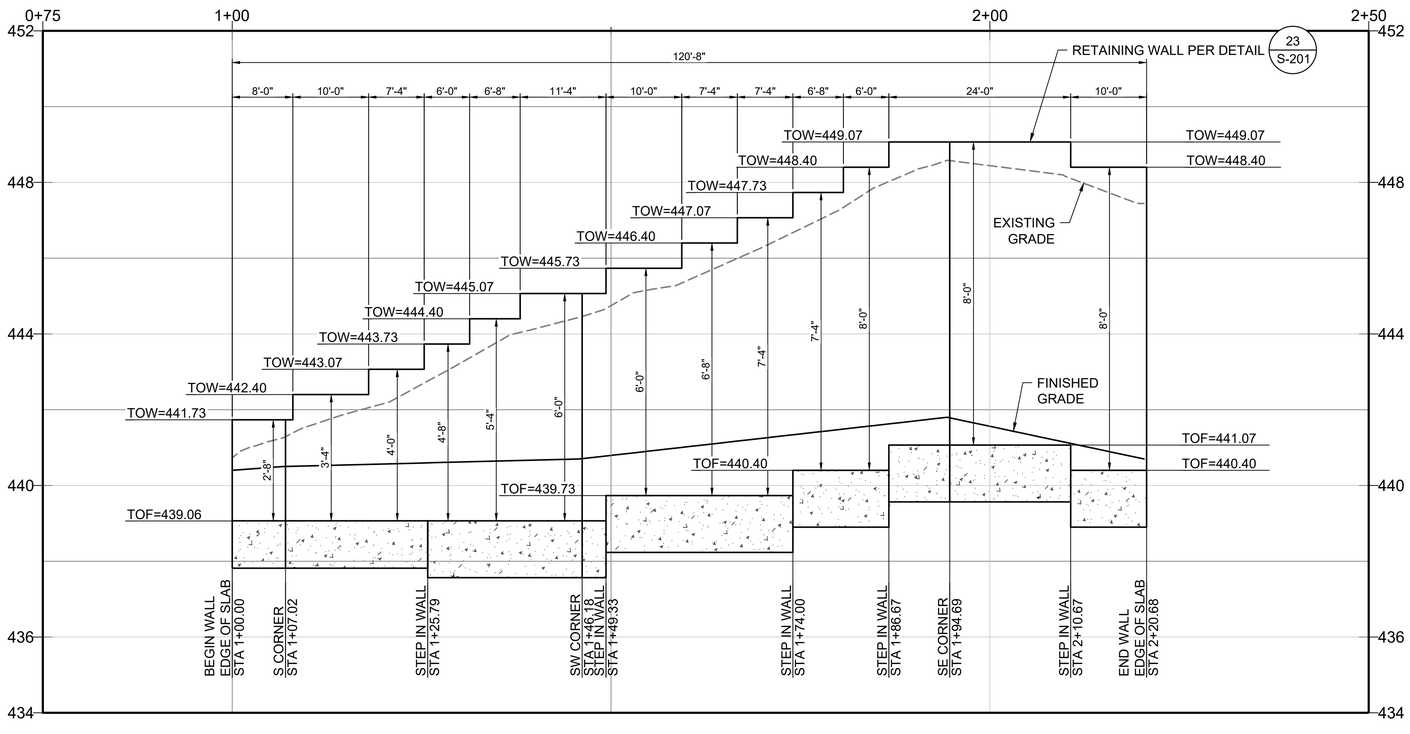

SOUTH RETAINING WALL PROFILE

SCALE: 1"=10'

A / -

0 10' 20'
H: 1" = 10'
V: 1" = 5'
0 5' 10'

Know what's below.
Call before you dig.

REV	DATE	DESCRIPTION	APPR
A			
A			
A			
A			

PROJECT ENGINEER: JON E. HANLON
REG NUMBER: M33232

REGISTERED PROFESSIONAL ENGINEER
JON E. HANLON
M33232
MECHANICAL
STATE OF CALIFORNIA

mkn
354 PACIFIC STREET
SAN LUIS OBISPO, CA 93401 (805) 329-4773

CAMBRIA COMMUNITY SERVICES DISTRICT
STUART STREET TANKS REPLACEMENT PROJECT

RETAINING WALL PROFILE

DESIGNED: JEH
DETAILED: CA
CHECKED: JJR
APPROVED: JEH
DATE: MAY 2025

0 1/2 1
IF THIS BAR DOES NOT MEASURE 1" THEN DRAWING IS NOT TO FULL SCALE

PROJECT NO.
-

C-505
SHEET
13 OF 20

DWG: N:\Cambria CSD\Cambria-2024-001 Stuart Street Tanks Replacement\300 Engineering\301 CAD\Plansets\C-505.dwg Layout Name: 13 C-505 - Plotted by: Chris Aakins Date: 5/2/2025 - 10:43 AM
XREFS: G-BD; C-GP; C-LP; V-SV IMAGES: CCSD_Logo.PNG; CAMLMKN.png

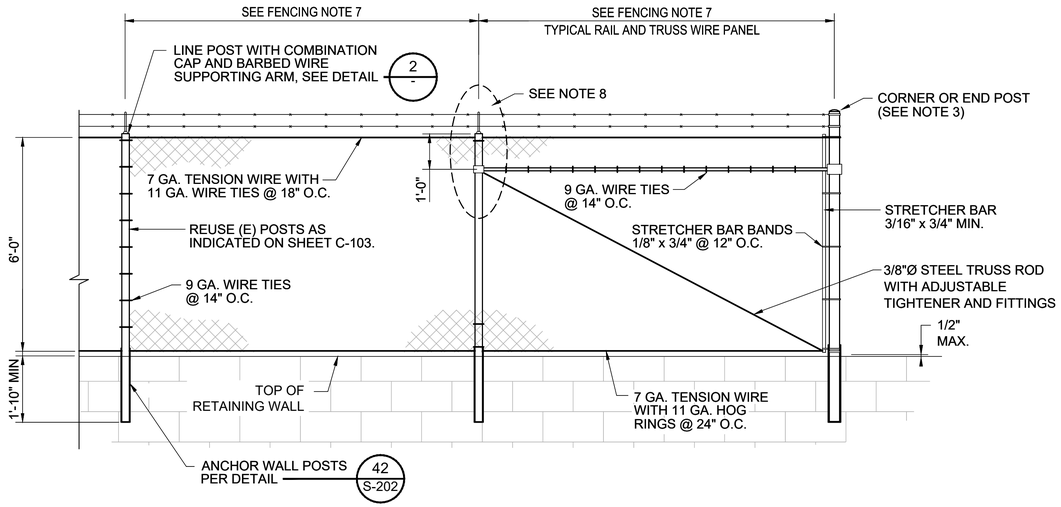

TYPICAL FENCE ELEVATION AT RETAINING WALL

NOT TO SCALE

1 -

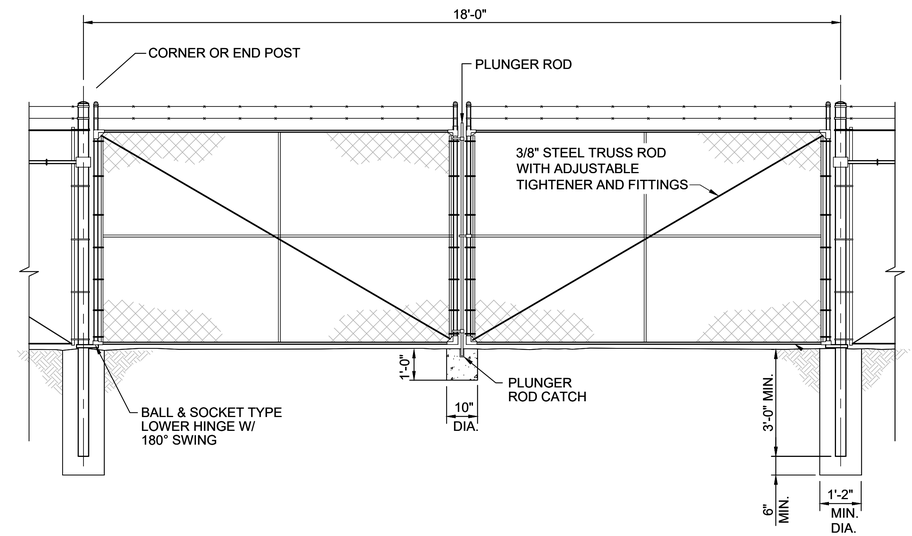

DOUBLE LEAF GATE

NOT TO SCALE

2 -

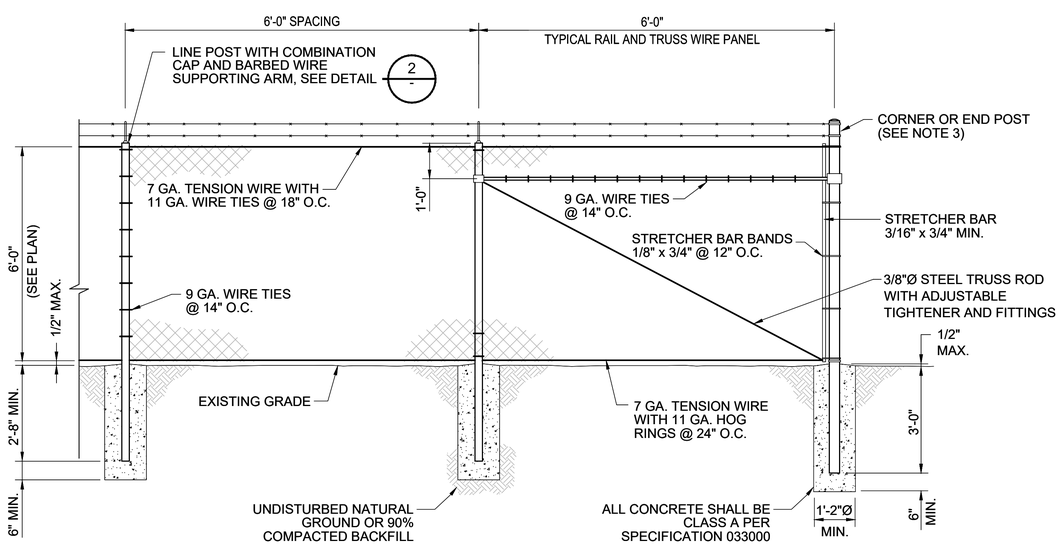

TYPICAL FENCE ELEVATION AT GRADE

NOT TO SCALE

3 -

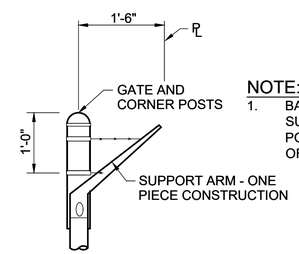

NOTE:

1. BARBED WIRE SUPPORT ARM TO POINT OUTWARDS OF SITE.

BARBED WIRE SUPPORT ARM

NOT TO SCALE

4 -

FENCING MATERIALS TABLE	
CORNER & END POSTS	2-7/8" OD SCH 40 STL PIPE
LINE POSTS	2" OD SCH 40 STL PIPE
GATE FRAMES	1-7/8" OD SCH 40 STL PIPE
CHAIN LINK FABRIC	9 GA WIRE 2" DIAMOND WIRE, KNUCKLED TOP & BOTTOM
TENSION WIRE	7 GA GALV SPRING COILED
TRUSS RODS	3/8" GALV STEEL
BRACES	1-1/2" OD SCH 40 STL PIPE
BARBED WIRE	2 STRAND, TWISTED 12 1/2-GAUGE STL. WIRES WITH 4-POINT ROUND SHAPE BARBS 5-INCHES APART
PRIVACY SLATS	1.77" x 6' TAN POLYETHYLENE PRIVACY SLATS CONFORMING TO ASTM TYPE F3000 TYPE P-V OR PI-V (STYLE 1B) WITH A MIN. 90% SCREENING

FENCING NOTES:

1. ALL PIPE DIAMETERS SHOWN ARE IRON PIPE SIZES, STANDARD WEIGHT.
2. FENCE POSTS ON CURVES SHALL BE BRACED AS RECOMMENDED BY MANUFACTURER.
3. CORNER AND END POSTS SHALL BE BRACED IN DIRECTION OF PULL.
4. BARBED WIRE ARM SHALL WITHSTAND A WEIGHT OF 200 LBS WITH NO PERMANENT DEFORMATION.
5. ALTERNATE DETAILS MAY BE SUBMITTED FOR APPROVAL.
6. INSTALL PRIVACY SLATS ON ALL 6'-0" FENCING.
7. MATCH (E) POST SPACING OR COORDINATE POST SPACING WITH RETAINING WALL ELEVATIONS PER SHEET C-505, AS APPLICABLE.
8. COORDINATE FENCE ELEVATION STEP DOWN WITH RETAINING WALL PER SHEET C-505.
9. PROVIDE PRIVACY SLATS PER FENCING MATERIALS TABLE.

Know what's below. Call before you dig.

REV	DATE	DESCRIPTION	APPR
A			
A			
A			
A			

PROJECT ENGINEER: JON E. HANLON
REG NUMBER: M33232

REGISTERED PROFESSIONAL ENGINEER JON E. HANLON M33232 MECHANICAL STATE OF CALIFORNIA

mkn
354 PACIFIC STREET
SAN LUIS OBISPO, CA 93401 (805) 329-4773

CAMBRIA COMMUNITY SERVICES DISTRICT
STUART STREET TANKS REPLACEMENT PROJECT

FENCE DETAILS

DESIGNED: JEH
DETAILED: CA
CHECKED: JJR
APPROVED: JEH
DATE: MAY 2025

0 1/2 1
IF THIS BAR DOES NOT MEASURE 1" THEN DRAWING IS NOT TO FULL SCALE

PROJECT NO. -

C-506
SHEET 14 OF 20

DWG: N:\Cambria CSD\Cambria-2024-001 Stuart Street Tanks Replacement\300 Engineering\301 CAD\Plansets\C-506.dwg Layout Name: 14 C-506 - Plotted by: Chris Askins Date: 5/2/2025 - 10:44 AM
XREFS: G-BD IMAGES: CCSD_Logo.PNG - G-MMKN.jpg

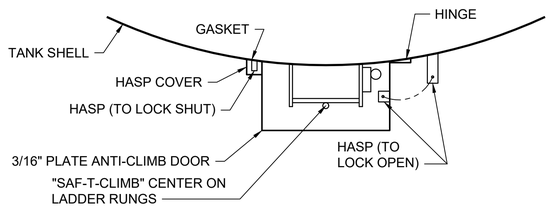

TOP VIEW

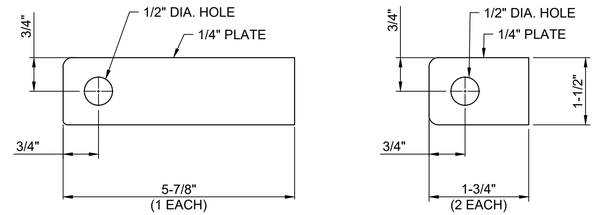

HASPS FOR ANTI-CLIMB DOOR

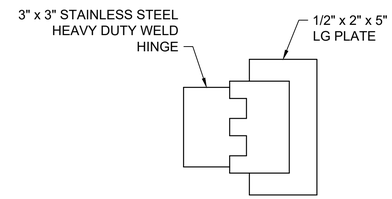

TYPICAL HINGE

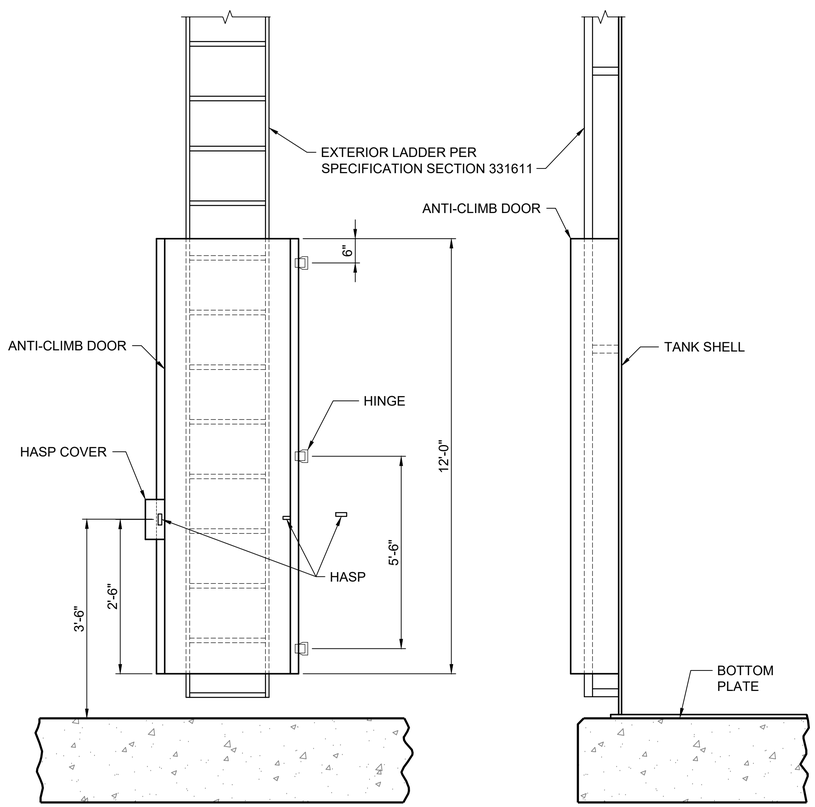

FRONT VIEW

SIDE VIEW

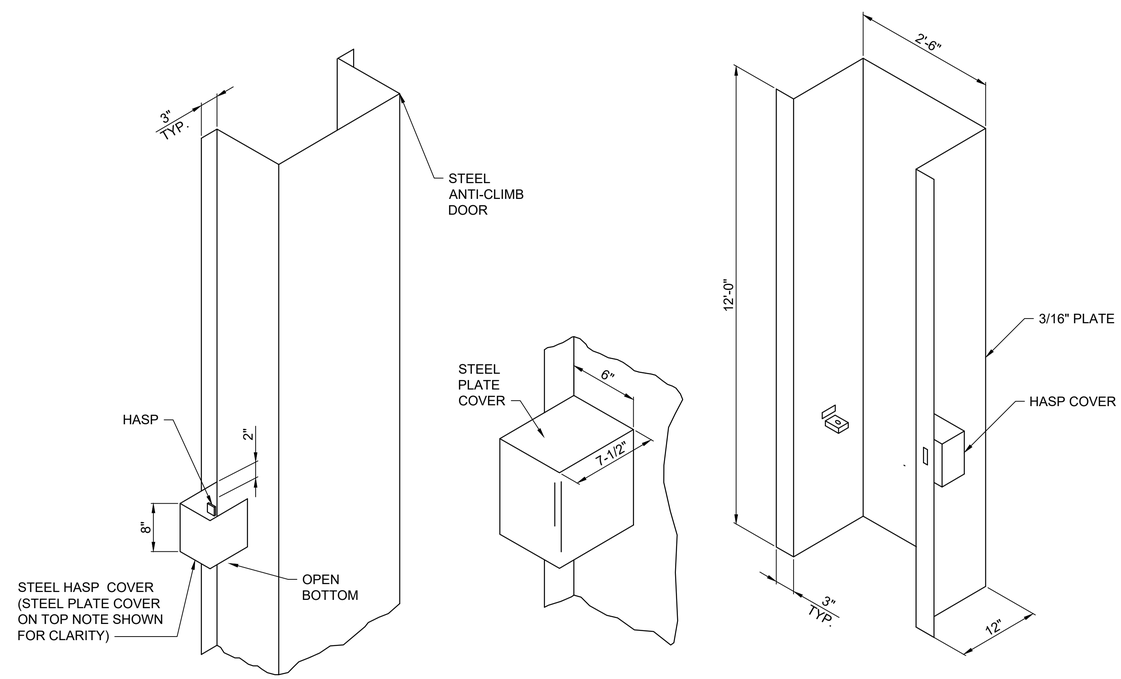

ANTI-CLIMB DOOR

NOT TO SCALE

1
-

Know what's below. Call before you dig.

REV	DATE	DESCRIPTION	APPR

PROJECT ENGINEER: JON E. HANLON
REG NUMBER: M33232

REGISTERED PROFESSIONAL ENGINEER
JON E. HANLON
M33232
MECHANICAL
STATE OF CALIFORNIA

mkn
354 PACIFIC STREET
SAN LUIS OBISPO, CA 93401 (805) 329-4773

CAMBRIA COMMUNITY SERVICES DISTRICT
STUART STREET TANKS REPLACEMENT PROJECT

ANTI-CLIMB DOOR

DESIGNED: JEH
DETAILED: CA
CHECKED: JJR
APPROVED: JEH
DATE: MAY 2025

0 1/2 1
IF THIS BAR DOES NOT MEASURE 1" THEN DRAWING IS NOT TO FULL SCALE

PROJECT NO.
-

C-507
SHEET
15 OF 20

DWG: N:\Cambria CSD\Cambria-2024-001 Stuart Street Tanks Replacement\300 Engineering\301 CAD\Planset\C-508.dwg Layout Name: 15 C-507 - Plotted by: Chris Adams Date: 5/2/2025 - 10:44 AM
XREFS: G-BID IMAGES: CCSD_Logo.PNG - CLIMMON.png -

STRUCTURAL NOTES

GENERAL NOTES

1. The following notes, typical details and schedules shall apply to all phases of this project unless otherwise shown or noted.
2. Specific notes and details shall take precedence over general notes and typical details.
3. All materials and workmanship shall conform to the minimum standards of the AWWA D100-21 and the 2022 California Building Code.
4. The "contract or construction documents" shall consist of these notes, details, schedules, plans, and drawings, as well as attached specifications.
5. All specifications, including but not limited to materials and products, shall be those put forth in the "contract or construction documents". No substitutions shall be permitted to be used or assumed to be used in the bidding or construction process without written approval by the Engineer of Record.
6. The contractor shall examine the "contract or construction documents" and shall notify the Engineer of any discrepancies he may find before proceeding with the work.
7. The Contractor shall immediately notify the Engineer of any condition which in his opinion might endanger the stability of the structure or cause distress of the structure.
8. These "contract or construction documents" represent the finished structure, and do not indicate the method of construction. The Contractor shall supervise and direct the work and shall be solely responsible for construction means, methods, techniques, sequences and procedures
9. The Contractor shall provide temporary bracing and shoring for all structural members as required for structural stability of the structure during all phases of construction.
10. The Contractor shall take all steps necessary to ensure proper alignment of the structure after the installation of all structural and finish materials. This shall include any necessary preloading of the structure to determine final position of the completed work.
11. These notes, details, drawings and specifications (contract or construction documents) do not carry necessary provisions for construction safety. These documents and all phases of construction hereby contemplated are to be governed, at all times, by applicable provisions of the current California Occupational Safety and Health Act.
12. Where any conflict occurs between the requirements of federal, state and local laws, codes, ordinances, rules and regulations, the most stringent shall govern.
13. Written dimensions shall have precedence over scaled dimensions.
14. In the event that certain features of the construction are not fully shown on the drawings or called for in the General Notes or Specifications, then their construction shall be of the same character as for similar conditions that are shown or called for.
15. Contractor shall have a copy of project soils/geotechnical/foundation investigation on the job site.
16. ASTM designation and all standards refer to the latest amendments.
17. These structural "contract or construction documents" shall not be modified without prior written approval of the Engineer of Record.
18. Only structural working drawings approved by the AHJ are permitted to be used for construction on this project. All other drawings or documents are obsolete and are not permitted on the job site, nor shall they be used for any construction purposes. Contractors using unapproved drawings or documents are solely responsible for all work not performed in accordance with the "approved" drawings.

FOUNDATION NOTES

1. Basis: See Structural Design Values Chart
2. Unexpected soil conditions: Allowable values and foundation design are based upon soil conditions shown by test borings. Actual soil conditions which deviate appreciably from that shown in the test borings shall be reported to the Project Soils Engineer immediately.
3. Excavate to required depths and dimensions (as indicated in drawings and Project Soils Report), cut square and smooth with firm level bottoms. Care shall be taken not to over-excavate foundation at lower elevation and prevent disturbing of soils around higher elevation.
4. Footings shall be poured in neat excavations, without side forms whenever possible.
5. Foundations shall not be poured until all required reinforcing steel, sleeves, inserts, conduits, pipes, etc. and formwork is properly placed and inspected by the Local Authority having Jurisdiction/Inspector.
6. The sides and bottoms of excavations which are to have concrete contact must be moistened several times just prior to pouring upon them.
7. De-water footings, as required, to maintain dry working conditions.
8. All foundation excavations shall be inspected and approved by Project Soils Engineer, prior to forming and placement of reinforcing or concrete.

CONCRETE

1. Concrete shall have a minimum ultimate compressive strength (f'_c) as outlined below. All concrete shall be regular weight (unless noted otherwise).

Location	f'c at 28 Days	Max. w/c Ratio	Slump
Footing and Housekeeping Pad	3,000 psi	0.50	4"±1"
Ringwall Foundation	4,000 psi	0.50	4"±1"
Slab on Grade	3,000 psi	0.50	4"±1"

2. Maximum Fly Ash content shall be 15%, by weight, of total cementitious materials and shall conform to ASTM C618.
3. All concrete work shall comply with CBC Chapter 19 and ACI 318-19 and latest edition of ACI Manual of Concrete Practice.
4. Special Inspection (as required or specified) shall conform to CBC Chapter 17.
5. Cement shall be Portland Cement Type II/V and shall conform to ASTM C150.
6. Aggregates shall conform to ASTM C33; provide aggregates from a single source.
7. Water shall conform to ASTM C94 and be potable.
8. All splices are to be Class B unless specifically noted otherwise.
9. Minimum concrete cover over reinforcing bar shall be:

Concrete cast against and permanently exposed to earth or weather	3"
Concrete placed against forms, but exposed to earth or weather	2"
Slabs, wall & joists, not exposed to earth or weather	¾"
Beams, girders & columns, not exposed to earth or weather	1½"

10. Reinforcing bars larger than #8 are not permitted unless noted otherwise.
11. Location of all construction joints, other than specified, shall be approved by Engineer of Record prior to pouring. Construction joints shall be thoroughly air and water cleaned and heavily roughened so as to expose coarse aggregates. All surfaces to receive concrete shall be maintained continuously wet at least three hours in advance of pouring.
12. All reinforcing steel, anchor bolts, dowels, inserts and any other hardware to be set in concrete shall be well secured in position prior to pouring of concrete.
13. The Contractor shall obtain approval from Engineer of Record prior to placing sleeves, pipes, ducts, chases, coring and openings on or through structural concrete beams, walls, floors and roof slabs, unless specifically detailed or noted. All pipes or conduits passing through concrete members shall be sleeved with standard steel pipes. See typical detail for pipe through footing.
14. Vibrate all concrete (including slabs on grade) as it is placed, with a mechanical vibrator operated by experienced personnel. The vibrator shall be used to consolidate the concrete, not transport it. Reinforcing and forms shall not be vibrated.
15. Formwork design and removal shall conform to ACI 318-19 Section 26.11. Remove forms in accordance with the following minimum schedule:

Side forms of footings	Minimum 48 hours
Edge forms of slab on grade	Minimum 24 hours
Wall/Retaining Wall forms	72 hours & 70% of design strength
Column forms	72 hours & 70% of design strength
Elevated beams and slabs	14 days & 80% of design strength

16. Concrete shall not free fall more than six feet. Use tremie, pump or other approved methods.
17. Concrete shall be maintained in a moist condition for a minimum of 5 days after placement or concrete surfaces shall be cured with liquid membrane-forming curing compound conforming to ASTM C309, Type 1, Class A. Curing compound shall be approved by the Engineer of Record.
18. The Contractor may use concrete admixtures as a construction means and methods to execute Construction Documents. Use of admixture is solely the responsibility of the Contractor.
19. Concrete mix designs shall be prepared by the concrete supply plant. Each mix design shall be submitted with current supporting data to the Engineer of Record for review and approval. Each mix design shall be stamped and signed by a Civil or Structural Engineer licensed in the state of the project jurisdiction.
20. Only one grade of concrete shall be allowed on project site at any one time.
21. Unless noted otherwise, construction and control joints shall be provided in all concrete slabs, and shall be located such that the area within joints does not exceed 375 sq. ft., and is roughly square.
    A. For all structural slabs (suspended or on grade) where Architecturally exposed conditions are desired, the Contractor shall provide control joint layout for review by Engineer of Record.
22. Every opening exceeding 24" (in either direction) shall have a minimum of 2-#5 (U.N.O.) directly adjacent to all sides as well as top and bottom (unless at foundation). Reinforcing bars shall extend a minimum of 24" past edge of opening.
23. Dowel all concrete walls and columns to supporting concrete with bars of the same size and spacing as vertical bars in wall and columns. Do not "hickey" bars. All dowels shall be vertical.
24. Provide a minimum of 2-#5 continuous horizontally at tops of walls and vertically at ends of walls, unless noted otherwise.

STRUCTURAL DESIGN VALUES

All values reported are unfactored and strength level, unless noted otherwise

Gravity Design Data	Value
Dead Loads:	
Tank Roof Dead Load	PER MFR.
Tank Floor Dead Load	PER MFR.
Tank Wall Dead Load	PER MFR.
Live Loads:	
Tank Roof Live Load (Reducible)	20 psf
Snow Loads:	
Ground Snow Load, P_g	0 psf

Wind Design Data	Value
Design Wind Speed (3-sec gust), V_{ULT}	103 mph
Design Wind Speed (3-sec gust), V_{ASD}	80 mph
Risk Category	IV
Exposure Category	C

Earthquake Design Data - Tank	Value
Risk Category	IV
Importance Factor, I_e	1.5
Mapped Spectral Response Accelerations	S_s= 1.179g S_1= 0.427 g
Site Class	C
Spectral Response Coefficients	S_{DS}=0.943 g S_{D1}= 0.427 g
Seismic Design Category	D
Analysis Procedure Used	Seismic Design of Water Storage Tanks (AWWA D100-21 Sec. 13.5)
Basic Seismic-Force Resisting System	Ground Supported Flat-Bottom Tanks
Response Modification Factor	
Impulsive Component	R_i = 3
Convective Component	R_w = 1.5
Horizontal Design Acceleration, ASD	
Dynamic Water Effects	A_i = 0.337
Static Water Effects	A_c = 0.125
Design Base Shear	$V = A\ w_D$

Geotechnical Design Data	Value
Geotechnical Report prepared by: Earth Systems Pacific - File No. 306519-001	Dated: 3/27/2024
Allowable Soil Bearing Pressure (DL + LL)	4,000 psf
Design Active Pressure, P_a	50 pcf
Design At-Rest Pressure, P_o	70 pcf
Design Passive Pressure, P_p	350 pcf
Retaining Wall Design Passive Pressure, P_p	450 pcf
Retaining Wall Design Seismic Pressure, P_{se}	8 pcf
Design Coefficient of Friction, f_f	0.35
Retaining Wall Design Coefficient of Friction, f_f	0.40

RETAINING WALL

1. See project Geotechnical Investigation and specific retaining wall details for additional requirements.
2. Unless noted otherwise, a continuous 12" (minimum) wide strip of granular drainage material shall be placed behind the wall before backfilling. The drainage material shall extend the full height of wall, up to 12" below top of the higher grade.
   A. Granular drainage material shall consist of gravel or crushed stone, and shall be free of organic material, clay or other deleterious material.
3. Backfilling and compaction:
   A. Free-standing walls - Do not backfill wall until 7 days or 70% of design strength (minimum) after placing of concrete or solid grouting of wall is completed. Backfill material shall be placed in continuous 12" lifts (for entire length of wall) and compacted with lightweight tampers. Do not frame wood stud walls or joist floors, or pour concrete slabs (at top of retention) until 7 days (minimum) after backfilling and compaction operation is complete.
6. All footings shall be poured against undisturbed ground or approved fill (as determined by project Geotechnical Engineer).
7. Contractor shall notify Engineer of Record if superimposed loading occurs from adjacent existing foundations or other structures within a distance equal to the overall height of the wall.
8. Maximum uphill slope behind wall (unless otherwise noted) shall be one vertical to five horizontal (1 vert : 5 horiz.)
9. A 4" (minimum) diameter perforated drain pipe, with perforations placed downward, shall be placed at the top of the footing and completely surrounded by granular drainage material. Drain pipe shall have a minimum 2% slope to daylight.
10. Before granular drainage material and backfill is placed, the entire retaining side of wall shall be thoroughly waterproofed.
11. A synthetic permeable fabric shall be installed between gravel drainage material and backfill material, to prevent infiltration of native soils or backfill material into drainage material.
12. The contractor shall provide temporary wall shoring as required for construction surcharge. Temporary shoring system(s) shall be designed by a professional engineer, licensed in the state of the project jurisdiction and contracted by the contractor.

ABBREVIATIONS

A.B.	Anchor Bolt
ABV.	Above
ACI	American Concrete Institute
ADD'L	Additional
ADJ.	Adjacent
AHJ	Authority Having Jurisdiction
AISC	American Institute of Steel Construction
AITC	American Institute of Timber Construction
AOR	Architect of Record
APA	American Plywood Association
APPROX.	Approximate(ly)
ASCE	American Society of Civil Engineers
ARCH.	Architect, Architecture
ASTM	American Society of Testing and Materials
ATR	All Thread Rod
AWS	American Welding Society
BLDG.	Building
BLK.	Block
BLKD.	Blocked
BLK'G	Blocking
BM.	Beam
B.O.	Bottom of _____
BOT.	Bottom
BRG.	Bearing
b/t	Between
CAC	California Administrative Code
CANT.	Cantilever
CBC	California Building Code
CIP	Cast-in-place
CJ	Control Joint
CJP	Complete Joint Penetration
℄	Centerline
CLG.	Ceiling
CLR.	Clear
CMU	Concrete Masonry Unit
COL.	Column
CONC.	Concrete
CONN.	Connection
CONST.	Construction
CONT.	Continue, Continuous
CSK.	Countersink
Ø	Diameter
d	Penny
DBL.	Double
DCW	Demand Critical Weld
DET.	Detail
DEMO	Demolition
DF	Douglas Fir
DIAG.	Diagonal
DL	Dead Load
DSA	Division of State Architect
DWGS.	Drawings
EA.	Each
E.F.	Each Face
ELEC.	Electric, Electrical
ELEV.	Elevation
EMBED.	Embedded, Embedment
E.N.	Edge Nailing
EOR	Engineer of Record
EQ.	Equal
EQUIP.	Equipment
E.S.	Each Side
E.W.	Each Way
(E)	Existing
EXP.	Expansion
EXT.	Exterior
FAB.	Fabricated
FDN.	Foundation
F.F.	Finish floor
FLR.	Floor
F.O.	Face of _____
FRMG.	Framing
FT.	Foot,Feet
FTG.	Footing
GA.	Gauge
GALV.	Galvanized
GEOR	Geotechnical Engineer of Record
GLB	Glued-Laminated Beam
GYP. BD.	Gypsum Board
HDR.	Header
HD.	Holdown
HORIZ.	Horizontal
HSS	Hollow Steel Section
HT.	Height
IBC	International Building Code
ICC	International Code Council
ICF	Insulated Concrete Form
ID	Inside Diameter
IN.	Inch,Inches
INT.	Interior
JST.	Joist
ksi	Kips per Square Inch
LL	Live Load
LW	Lightweight
LSL	Laminated Strand Lumber
LVL	Laminated Veneer Lumber
MAX.	Maximum
MB	Machine Bolt
MBM	Metal Building Manufacturer
MECH.	Mechanical
MSE	Mechanically Stabilized Earth
MFR.	Manufactured, Manufacturer
MIN.	Minimum
MPH	Miles per Hour
MTL.	Metal
(N)	New
NDS	National Design Specification
N.T.S.	Not to Scale
o.c.	On Center
o/	Over
OD	Outside Diameter
OSB	Oriented Strand Board
OSHPD	Office of State Health Planning and Development
OWSJ	Open Web Steel Joist
PEN.	Penetration
PL.	Plate
PLYWD.	Plywood
PJP	Partial Joint Penetration
psi	Pounds per Square Inch
PSF	Pounds per Square Foot
PSL	Parallel Strand Lumber (Paralam)
PEMB	Pre-Engineered Metal Building
PERF.	Perforated
PTDF	Pressure Treated Douglas Fir
PW	Puddle Weld
Q.A.	Quality Assurance
Q.C.	Quality Control
RBS	Reduced Beam Section
RDWD	Redwood
REBAR	Reinforcing Bar
REINF.	Reinforcement
RET.	Retaining
REQ'D	Required
S.F.	Square Feet
SHT.	Sheet
SHT'G	Sheathing
SIM.	Similar
SIP	Structural Insulated Panel
SJI	Steel Joist Institute
SLRS	Seismic Load Resisting System
SMS	Sheet Metal Screw
SQ.	Square
SS	Select Structural
STAGG'D	Staggered
STD.	Standard
STL.	Steel
SW	Shearwall
SEOR	Structural Engineer of Record
T&B	Top and bottom
T&G	Tongue and Groove
THR'D	Threaded
T.O.	Top of _____
TRL.	Triple
TYP.	Typical
UNBLKD.	Unblocked
U.N.O.	Unless Noted Otherwise
URM	Unreinforced Masonry
VERT.	Vertical
VIF	Verify in Field
w/	With
w/c	Water/Cement Ratio
WD.	Wood
W.P.	Working Point
W.S.M.F.	Welded Steel Moment Frame
WSS	Welded Steel Stud
WT.	Weight
WWM	Welded Wire Mesh

SYMBOLS

Concrete Footing

DET / SHT — Detail Number Reference / Sheet Number Reference

— Reference Note

Elevation Reference

811 Know what's below. Call before you dig.

REGISTERED PROFESSIONAL ENGINEER — MICHAEL E. PARRIN — No. S405 — STRUCTURAL — STATE OF CALIFORNIA

DATE SIGNED: 04.30.2025

THESE DRAWINGS, NOTES AND DETAILS ARE INSTRUMENTS OF SERVICE AND ARE THE PROPERTY OF SSG STRUCTURAL ENGINEERS, LLP. ALL DRAWINGS, INFORMATION, SPECIFICATIONS, IDEAS, DESIGNS AND ARRANGEMENTS REPRESENTED WITHIN THESE DOCUMENTS SHALL REMAIN THE PROPERTY OF SSG STRUCTURAL ENGINEERS, LLP AND SHALL BE COPIED, DISCLOSED TO OTHERS OR USED IN CONNECTION WITH ANY WORK OR PROJECT OTHER THAN THE SPECIFIC PROJECT FOR WHICH THEY HAVE BEEN PREPARED AND DEVELOPED WITHOUT THE EXPRESSED WRITTEN CONSENT OF THE ENGINEER. COPYRIGHT 2025.

SSG Structural Engineers, LLP
805.482.2110
811 El Capitan Way, Suite 240
San Luis Obispo, CA 93401
sspgse.com
8455 N. Fresno Street, Suite 120
Fresno, CA 93720

REV	DATE	DESCRIPTION	APPR
4			
3			
2			
1			

PROJECT ENGINEER: JON E. HANLON
REG NUMBER: M33232
EXP DATE:

mkn
354 PACIFIC STREET
SAN LUIS OBISPO, CA 93401 (805) 904-6530

CAMBRIA COMMUNITY SERVICES DISTRICT
STUART STREET TANKS REPLACEMENT PROJECT

STRUCTURAL NOTES

DESIGNED: JMK
DETAILED: JMK
CHECKED: MEP
APPROVED: —
DATE: APRIL 2025

0 1/2 1
IF THIS BAR DOES NOT MEASURE 1" THEN DRAWING IS NOT TO FULL SCALE

PROJECT NO. 2-2024-STU

S-001

STRUCTURAL NOTES

MASONRY

1. Masonry shall have a minimum compressive strength (f'_m) of 2,000 psi. All masonry construction shall be solid grouted and conform to Part 2 of TMS 602-16.
   A. A.A.C. (autoclaved aerated concrete) masonry units and construction are not allowed.

2. Masonry Units:
   A. Conform to CBC Section 2103.1 and ASTM C90, load bearing concrete masonry units.
   B. Open-end masonry units (speed block) are acceptable (except in architecturally exposed conditions).
   C. Medium-weight aggregate.
   D. Unit shall have a minimum net compressive strenght of 2,000 psi

3. Mortar:
   A. Mortar shall conform to CBC Section 2103.2, ASTM C270, and Sections 2.1 and 2.6A of TMS 602-16.
   B. Mortar shall be type M or S
   C. Mortar shall develop a minimum compressive strength of 2,000 psi at 28 days.

4. Grout:
   A. Grout shall conform to CBC Section 2103.3, ASTM C476, and Section 2.2 OF TMS 602-16.
   B. Grout shall develop a minimum compressive strength of 2,000 psi at 28 days.
   C. Grout Slump: 8 - 11 inches

5. Requirements for masonry construction shall conform to the following:
   A. Masonry construction shall conform to CBC Section 2104 and TMS 602-16.
   B. Unless noted otherwise, every opening exceeding 24" in either direction shall have a minimum of 2-#5 horizontal directly above and below (unless at foundation) and vertical adjacent to both sides. Reinforcing bars shall extend a minimum of 24" beyond edge of opening.
   C. At the end of all walls shall be a minimum of 2-#5 vertical, U.N.O.
   D. At the top of all walls shall be a minimum of 2-#3 horizontal, U.N.O.
   E. Dowel masonry walls and columns to supporting concrete with bars of the same size and spacing as vertical. See typical details for minimum length of splice.
   F. Bond shall be provided by lapping units in successive vertical courses (running bond). Stack bond or mechanical anchorage shall not be used unless noted or detailed otherwise.
   G. At the time of laying all masonry units shall be free of excessive dust and dirt.
   H. Grouting operations, maximum grout pour height and use of cleanouts shall conform to TMS 602-16, specifications Section 3.5 and Table 6. Cleanouts (if required) shall be provided by suitable 'C' openings in the face shells in the bottom course of each cell to be grouted, or other approved locations (see details provided). The cleanouts shall be sealed after inspection and before grouting.
   I. All cells shall be filled solidly with grout. Grout shall be a workable mix suitable for pumping without segregation and shall be thoroughly mixed. Grout shall be placed by pumping or an approved alternate method and shall be placed before initial set or hardening occurs. Grout shall be consolidated by mechanical vibration during placing and reconsolidated after excess moisture has been absorbed but before workability is lost. Do not vibrate reinforcing bars. The grouting of any section of a wall shall be completed in one day with no interruptions greater than one hour.
   J. When the grouting is stopped for one hour or longer, horizontal construction joints shall be formed by stopping the pour of grout approximately 1½" above or below a bed joint.
   K. All reinforcing shall be in place and secured prior to grouting. Reinforcement shall be placed and secured in conformance with CBC Section 2103.4 and TMS 602-16, Section 2.4.

6. Reinforcing bars larger than #8 are not permitted unless detailed or noted otherwise.

7. Special Inspection shall conform to CBC Chapter 17.

8. Location of all construction/control joints, other than those specified, shall be approved by the Engineer of Record prior to placement.

9. Unless detailed or noted otherwise, vertical control joints shall be provided in all masonry walls, and spaced at a distance approximately equal to wall height, (but not greater than 24'-0" o.c.). Control joints shall extend full height of wall. Control joints shall not be required when wall length does not exceed 1.5 times the wall height.

10. When ambient temperature falls below 40°F, construction shall conform to Part 1.8C of the TMS 602-16.

11. When ambient temperature exceeds 90°F, construction shall conform to Part 1.8 of the TMS 602-16.

12. Use of 'L' or 'J' bolts embed into masonry construction is prohibited.

SPECIAL INSPECTION

GENERAL NOTES

1. All Special Inspection shall be provided in accordance with AWWAD100-11 Section 11.

2. Where Special Inspection is required, all inspection or testing shall be provided by an "approved agency" in accordance with AWWA D100 Section 11

3. Special Inspectors shall keep records of inspections. The Special Inspector shall furnish inspection reports to the Authority Having Jurisdiction, and the Engineer of Record. Reports shall indicate that work inspected was done in conformance to approved construction documents. Discrepancies shall be brought to the immediate attention of the contractor for correction. If the discrepancies are not corrected, the discrepancies shall be brought to the attention of the Authority Having Jurisdiction and to the Engineer of Record prior to the completion of that phase of work. A final report documenting required Special Inspections and correction of any discrepancies noted in the inspections shall be submitted at a point in time agreed upon by the permit applicant and the Authority Having Jurisdiction prior to the start of work.

4. Special Inspectors shall be approved by local Authority Having Jurisdiction in accordance with AWWA D100.

5. Local Authority Having Jurisdictions may require Special Inspection for "Special Cases" in accordance with AWWA D100

6. Refer to Special Inspection requirements by other disciplines not included herein.

SOILS[a]

Verification and Inspection	Continuous	Periodic
1. Verify materials below shallow foundations are adequate to achieve the design bearing capacity.		✓
2. Verify excavations are extended to proper depth and have reached proper material.		✓
3. Perform classification and testing of compacted fill materials.		✓
4. Verify use of proper materials, densities and lift thicknesses during placement and compaction of compacted fill.	✓	
5. Prior to placement of compacted fill, observe subgrade and verify that site has been prepared properly.		✓

Notes: Soils
a. See CBC Section 1705.6 and Table 1705.6

CONCRETE CONSTRUCTION[ab]

Verification and Inspection	Continuous	Periodic
1. Inspection of reinforcing steel including prestressing tendons, and placement.[c]		✓
2. Inspection of reinforcing steel welding in accordance with Table 1705.2.2. item 2b.[d]		
3. Inspection of anchors cast in concrete where allowable loads have been increased or where strength design is used.[e]		✓
4. Verifying use of required design mix.[g]		✓
5. At the time fresh concrete is sampled to fabricate specimens for strength tests, perform slump and air content tests, and determine the temperature of the concrete.[h]	✓	
6. Inspection for maintenance of specified curing, temperature and techniques.[j]		✓
7. Inspect formwork for shape, location and dimensions of the concrete member being formed.[n]		✓

Notes: Concrete Construction
a. Where applicable, see also CBC Section 1705.11, Special Inspections for seismic resistance
b. Specific requirements for Special Inspection shall be included in the research report for the anchor issued by an approved source in accordance with ACI 355.2 or other requirements. Where specific requirements are not provided, Special Inspection requirements shall be specified by the Registered Design Professional and shall be approved by the Building Official prior to the commencement of the work.
c. ACI 318: 3.5, 7.1-7.7, IBC 1910.4
d. AWS D1.4, ACI 318, 3.5.2
e. ACI 318: 8.1.3, 21.2.8, IBC 1908.5, 1909.1
f. ACI 318: 3.8.6, 8.1.3, 21.2.8, IBC 1909.1
g. ACI 318: CH. 4, 5.2-5.4, IBC 1904.2, 1910.2, 1910.3
h. ASTM C172, ASTM C31, ACI 318: 5.6, 5.8, IBC 1910.10
i. ACI 318: 5.9, 5.10, IBC 1910.6, 1910.7, 1910.8
j. ACI 318: 5.11-5.13, IBC 1910.9
k. ACI 318: 18.20, 18.18.4
l. ACI 318: CH. 16
m. ACI 318: 6.2
n. ACI 318: 6.1.1

MASONRY CONSTRUCTION

Minimum Verification Requirements	Referenced Standard TMS 602
Prior to construction, verification of compliance of submittals	Art. 1.5
Prior to construction, verification of f'_m	Art. 1.4 B
During construction, verification of Slump flow and Visual Stability Index (VSI) when self-consolidating grout is delivered to the project site	Art. 1.5 & 1.6.3

Verification and Inspection	Cont.	Periodic	Referenced Standard TMS 402	Referenced Standard TMS 602
1. As masonry construction begins, verify the following are in compliance:				
a. Proportions of site-prepared mortar		✓		Art. 2.1, 2.6A & 2.6C
b. Grade, type, and size of reinforcement connectors and anchor bolts		✓		Art. 3.4 & 3.6A
c. Sample panel construction		✓		Art. 1.6D
2. Prior to grouting, verify that the following are in compliance:				
a. Grout space		✓		Art. 3.2D & 3.2F
b. Placement of reinforcement, connectors, and anchor bolts		✓	Sec. 6.1, 6.3.1, 6.3.6, & 6.3.7	Art. 3.2E & 3.4
c. Proportions of site-prepared grout		✓		Art. 2.6B & 2.4G.1.b
3. Verify compliance of the following during construction:				
a. Material and procedures with the approved submittals		✓		Art. 1.5
b. Placement of masonry units and mortar joint construction		✓		Art. 3.3B
c. Size and location of structural members		✓		Art. 3.3F
d. Type, size, and location of anchors, including other details of anchorage of masonry to structural members, frames, or other construction		✓	Sec. 1.2.1 (e), 6.2.1, & 6.3.1	
e. Welding of reinforcement	✓		Sec. 6.1.6.1.2	
f. Preparation, construction, and protection of masonry during cold weather (temperature below 40°f or hot weather (temperature above 90°)		✓		Art. 1.8C & 1.8 D
4. Observe preparation of grout specimens, mortar specimens, and/or prisms		✓		Art. 1.4B.2.a.3, 1.4B.2.b.3, 1.4B.2.c.3, 1.4B.3 & 1.4B.4

811 Know what's below. Call before you dig.

REGISTERED PROFESSIONAL ENGINEER MICHAEL E. PARRILLA No. 5405 STRUCTURAL STATE OF CALIFORNIA

DATE SIGNED: 04.30.2025

THESE DRAWINGS, NOTES AND DETAILS ARE INSTRUMENTS OF SERVICE AND ARE THE PROPERTY OF SSG STRUCTURAL ENGINEERS, LLP. ALL DRAWINGS, INFORMATION, SPECIFICATIONS, IDEAS, DESIGNS AND ARRANGEMENTS REPRESENTED WITHIN THESE DOCUMENTS SHALL REMAIN THE PROPERTY OF THE DESIGNER AND THEY SHALL NOT BE COPIED, DISCLOSED TO OTHERS OR USED IN CONNECTION WITH ANY WORK OR PROJECT OTHER THAN THE SPECIFIC PROJECT FOR WHICH THEY HAVE BEEN PREPARED AND DEVELOPED WITHOUT THE EXPRESSED WRITTEN CONSENT OF THE ENGINEER. COPYRIGHT 2025.

SSG Structural Engineers, LLP
805.482.3110
811 B Capitolo Way, Suite 100
San Luis Obispo, CA 93401
SSGpbc.Com
8455 N. Fresno Street, Suite 120
Fresno, CA 93720

mkn
354 PACIFIC STREET
SAN LUIS OBISPO, CA 93401 (805) 904-6530

REV	DATE	DESCRIPTION	APPR
1			
2			
3			
4			

PROJECT ENGINEER: JON E. HANLON
REG NUMBER: M33232
EXP DATE:

CAMBRIA COMMUNITY SERVICES DISTRICT
STUART STREET TANKS REPLACEMENT PROJECT

STRUCTURAL NOTES

DESIGNED: JMK
DETAILED: JMK
CHECKED: MEP
APPROVED: ---
DATE: APRIL 2025

0 1/2 1
IF THIS BAR DOES NOT MEASURE 1" THEN DRAWING IS NOT TO FULL SCALE

PROJECT NO. 2-2024-STU

S-002
SHEET 17 OF 20

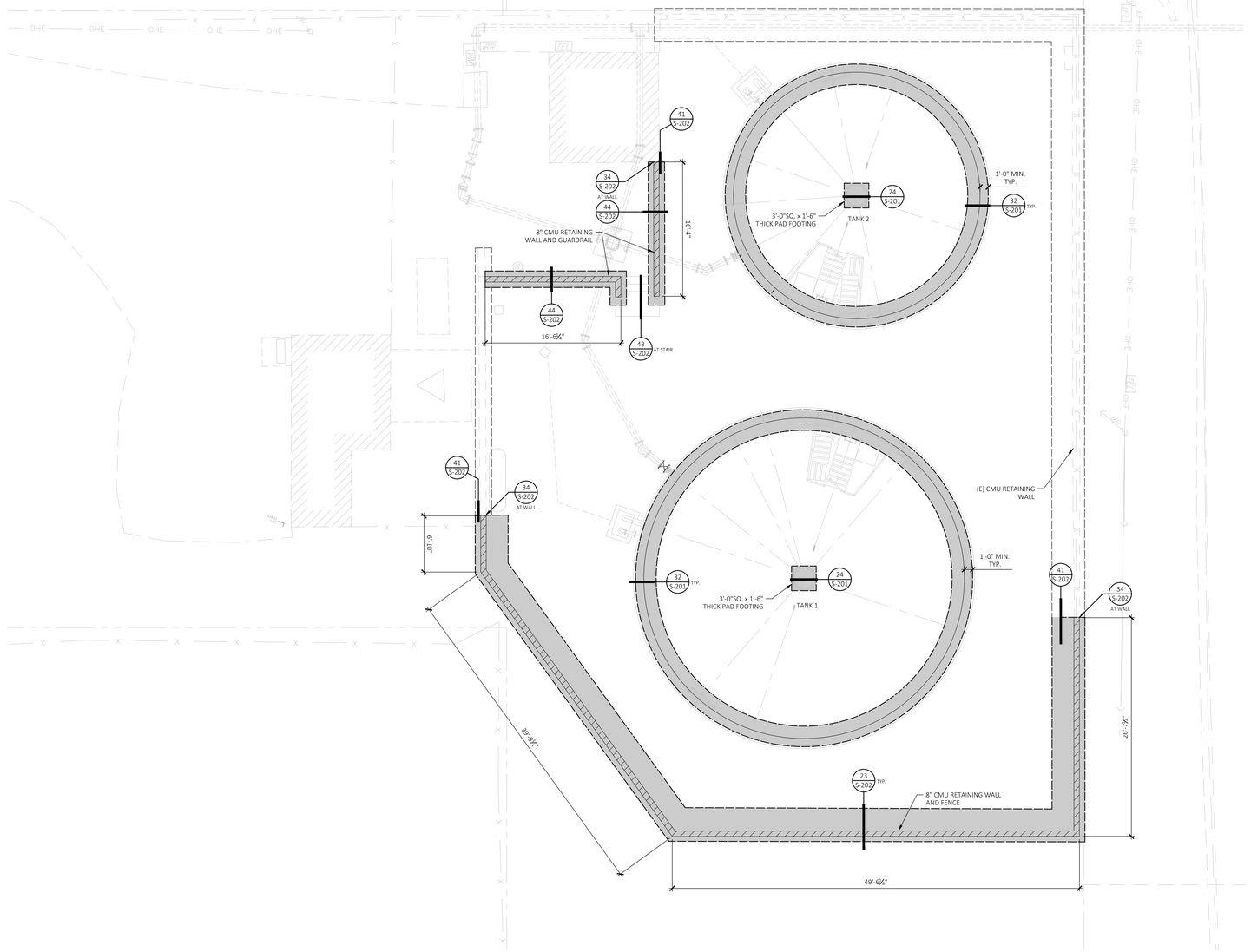

STRUCTURAL SITE PLAN

SCALE: 1/8" = 1'-0"

(VERIFY ALL DIMENSIONS WITH CIVIL PLANS AND EXISTING CONDITIONS)

FOUNDATION NOTES:

1. The foundation design is based on the minimum requirements outlined in the Project Geotechnical Engineering Report prepared by Earth Systems Pacific
2. Prior to the Contractor requesting a Building Department Foundation Inspection, the Soils Engineer shall advise the Building Official in writing that:
   a. The tank pad was prepared in accordance with the Soils Engineer's recommendations.
   b. The utility trenches have been properly backfilled and compacted.
   c. The foundation excavations comply with the Soils Engineer's recommendations.
   d. The soils expansion index is verified.
3. Holdowns, anchor bolts, tiedown anchors, foundation straps, etc. shall be in place held by templates or wire ties, prior to concrete inspection.
4. See S-001 and S-002 for Structural Notes
5. Grades and elevations shown are for reference. See Civil Drawings for final grades and site drainage. See Civil drawings for wall profile elevation.
6. Retaining wall footing shall be founded in competent bedrock as determined by the project Geotechnical Engineer and should be embedded a minimum of 2 feet below the lowest adjacent grade.
7. Footings shown are for graphical purposes. Contractor shall determine footing steps and plan footing dimensions based on final grade conditions. Coordinate footing size with retained height. See 23/S-202.
8. See 12/S-202 for wall control joint. Space control joints at 24'-0"o.c. maximum.
9. See 23/S-201 for footing pour break at ring wall. See 32/S-202 for footing pour break at retainng wall.

TANK FOUNDATION BASIS OF DESIGN:

Note: Reactions shall be verified by S.E.O.R. during Tank shop drawing review

Tank 1:
Shear at Top of Foundation:
V = 377 kips (0.7E)

Overturning Moment at Top of Foundation:
M_{OT} =3,520 k-ft (0.7E)

Tank 2:
Shear at Top of Foundation:
V = 258 kips (0.7E)

Overturning Moment at Top of Foundation:
M_{OT} = 2,400 k-ft (0.7E)

See S-001 for design criteria.

Know what's **below.**
Call before you dig.

REGISTERED PROFESSIONAL ENGINEER
MICHAEL E. PARDUN
C 047540
STRUCTURAL
STATE OF CALIFORNIA

DATE SIGNED:
04.30.2025

THESE DRAWINGS, NOTES AND DETAILS ARE INSTRUMENTS OF SERVICE AND ARE THE PROPERTY OF SSG STRUCTURAL ENGINEERS, LLP. ALL IDEAS, DRAWINGS, INFORMATION, SPECIFICATIONS, IDEAS, DESIGNS AND ARRANGEMENTS REPRESENTED WITHIN THESE DOCUMENTS SHALL REMAIN THE PROPERTY OF THE ENGINEER AND THEREFORE SHALL NOT BE COPIED, DISCLOSED TO OTHERS OR USED IN CONNECTION WITH ANY WORK OR PROJECT OTHER THAN THE SPECIFIC PROJECT FOR WHICH THEY HAVE BEEN PREPARED AND DEVELOPED WITHOUT THE EXPRESSED WRITTEN CONSENT OF THE ENGINEER. COPYRIGHT 2025.

SSG
SSG Structural Engineers, LLP
805.482.3110
811 B Capitan Hwy, Suite 240
San Luis Obispo, CA 93401
ssgpac.com
8455 N. Fresno Street, Suite 120
Fresno, CA 93720

REV	DATE	DESCRIPTION	APPR
4			
3			
2			
1			

PROJECT ENGINEER: JON E. HANLON
REG NUMBER: M33232
EXP DATE:

mkn
354 PACIFIC STREET
SAN LUIS OBISPO, CA 93401 (805) 904-6530

CAMBRIA COMMUNITY SERVICES DISTRICT
STUART STREET TANKS REPLACEMENT PROJECT

STRUCTURAL SITE PLAN

DESIGNED: JMK
DETAILED: JMK
CHECKED: MEP
APPROVED: ---
DATE: APRIL 2025

0 1/2 1
IF THIS BAR DOES NOT MEASURE 1" THEN DRAWING IS NOT TO FULL SCALE

PROJECT NO.
2-2024-STU

S-101

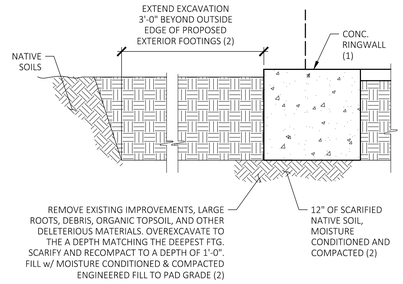

NOTES: (#)
1. SEE FOUNDATION PLAN AND NOTES
2. REFER TO PROJECT SOILS REPORT

BLDG. PAD PREPARATION (31)
N.T.S.

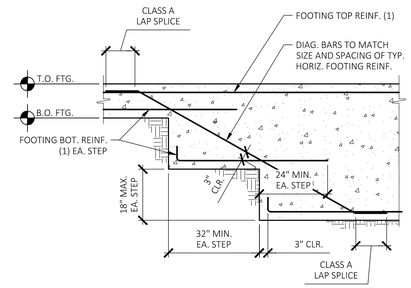

NOTES: (#)
1. SEE FOUNDATION PLAN AND NOTES

STEPPED FOOTING (21)
N.T.S.

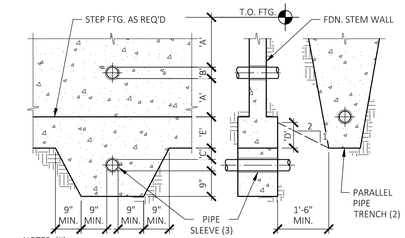

NOTES: (#)
1. DIMENSION - 'A' ½ MIN. OVERALL FOOTING DEPTH
   'B' ½ MAX. OVERALL FOOTING DEPTH
   'C' 4" MIN.
   'D' 9" MIN.
   'E' NO PIPE TO BE PLACED IN THIS AREA
2. PIPE TRENCHES PARALLEL TO FOOTING NOT PERMITTED BETWEEN LINES ON EACH SIDE OF FOOTING
3. G.I.S.M. OR EQUIVALENT PIPE SLEEVE, WITH ½" CLEAR ALL AROUND PIPE

PIPE THROUGH FOOTING (11)
N.T.S.

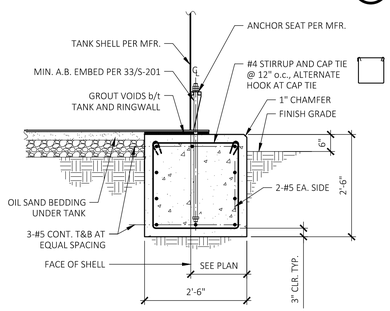

FOOTING SECTION (32)
N.T.S.

REINFORCMENT CLEAR COVER		
USE	BAR SIZE	CLEAR COVER
CONCRETE CAST AGAINST AND PERMANENTLY EXPOSED TO EARTH	#3 THROUGH #11	3"
FORMED CONCRETE EXPOSED TO EARTH OR WEATHER	#6 THROUGH #11	2"
	#5 AND SMALLER	1½"
WALLS	#11 AND SMALLER	¾"
BEAMS	#11 AND SMALLER	1½"
SLABS	#6 THROUGH #11	¾"
	#5 AND SMALLER	½"

TYPICAL CONCRETE COVER (22)
N.T.S.

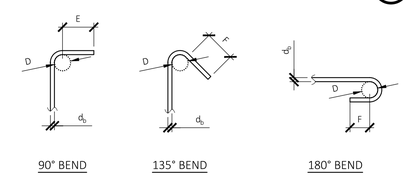

Bar Size	Dimension of Standard Bends		
	D	E	F ($6d_b$) [3" min.]
#3	1½"Ø	2¼"	3"
#4	2"Ø	3"	3"
#5	2½"Ø	3¾"	3¾"

TIE AND STIRRUP BENDS (12)
N.T.S.

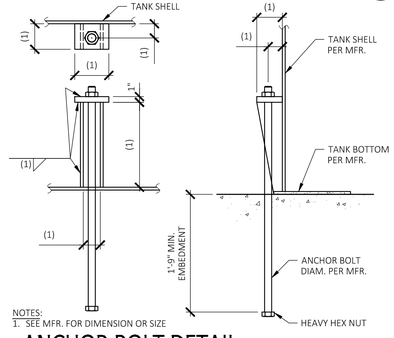

NOTES:
1. SEE MFR. FOR DIMENSION OR SIZE

ANCHOR BOLT DETAIL (33)
N.T.S.

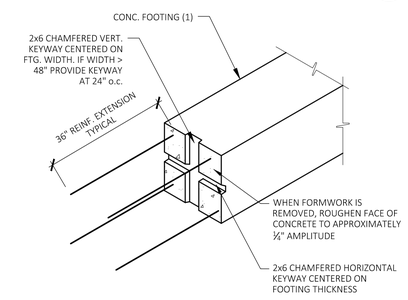

NOTES:
1. SEE FOUNDATION PLAN AND NOTES

FOOTING POUR BREAK (23)
N.T.S.

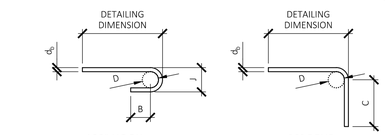

Bar Size	Dimension of Standard Hooks and Bends			
	D	J	B ($4d_b$) [2½" min.]	C ($12d_b$)
#3	1½"Ø	2¼"	2½"	4½"
#4	2"Ø	3"	2½"	6"
#5	2½"Ø	3¾"	2½"	7½"
#6	4½"Ø	6"	3"	9"
#7	5¼"Ø	7"	3½"	10½"
#8	6"Ø	8"	4"	12"
#9	9"Ø	11½"	4½"	13½"
#10	10"Ø	12½"	5"	15"

REBAR HOOKS & BENDS (13)
N.T.S.

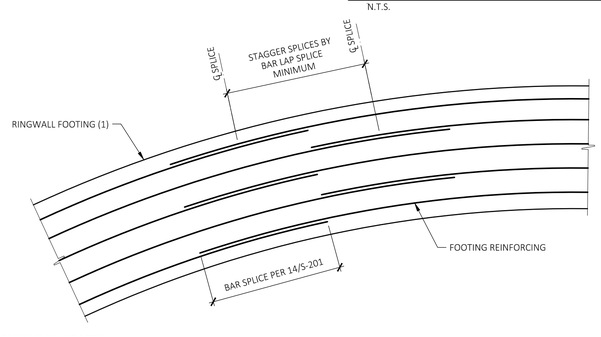

NOTES: (#)
1. SEE FOUNDATION PLAN AND NOTES

FOOTING REINFORCING SPLICE (34)
N.T.S.

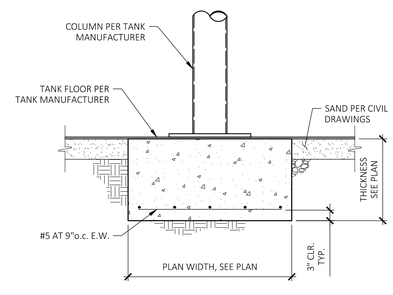

FOOTING AT TANK COLUMN (24)
N.T.S.

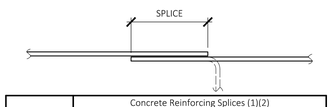

Bar Size	Concrete Reinforcing Splices (1)(2) f'_c = 3,000 psi		
	Class A Splice (3)(4)	Class B Splice (3)	f_y (Min.)
#3	15"	19"	40 ksi
#4	29"	38"	60 ksi
#5	36"	47"	60 ksi
#6	43"	56"	60 ksi
#7	63"	81"	60 ksi

NOTES: (#)
1. LAP LENGTHS LISTED APPLY TO ALL LOCATIONS: VERTICAL, HORIZONTAL, TOP, BOTTOM, AND SITE WALLS
2. WHERE BARS OF A DIFFERENT SIZE ARE LAPPED, THE LAP LENGTH SHALL BE THE LENGTH REQUIRED BY THE LARGER BAR
3. ALL SPLICES SHALL BE CONSIDERED CLASS B UNLESS SPECIFICALLY NOTED OTHERWISE
4. SPLICES OF SLAB ON GRADE REINFORCEMENT MAY UTILIZE CLASS A SPLICE LENGTHS

TYPICAL LAP SPLICES (14)
N.T.S.

Know what's below. Call before you dig.

REGISTERED PROFESSIONAL ENGINEER — MICHAEL E. PARRILLI — No. 5405 — STRUCTURAL — STATE OF CALIFORNIA

DATE SIGNED: 04.30.2025

THESE DRAWINGS, NOTES AND DETAILS ARE INSTRUMENTS OF SERVICE AND ARE THE PROPERTY OF SSG STRUCTURAL ENGINEERS, LLP. ALL DRAWINGS, INFORMATION, SPECIFICATIONS, IDEAS, DESIGNS AND ARRANGEMENTS REPRESENTED WITHIN THESE DOCUMENTS SHALL REMAIN THE PROPERTY OF THE ENGINEER AND WILL NOT BE SHALL BE COPIED, DISCLOSED TO OTHERS OR USED IN CONNECTION WITH ANY WORK OR PROJECT OTHER THAN THE SPECIFIC PROJECT FOR WHICH THEY HAVE BEEN PREPARED AND DEVELOPED WITHOUT THE EXPRESSED WRITTEN CONSENT OF THE ENGINEER. COPYRIGHT 2025.

SSG Structural Engineers, LLP
805.482.3110 — 811 El Capitan Way, Suite 240, San Luis Obispo, CA 93401
SSGSE.COM — 8455 N. Fresno Street, Suite 120, Fresno, CA 93720

mkn
354 PACIFIC STREET
SAN LUIS OBISPO, CA 93401 (805) 904-6530

REV	DATE	DESCRIPTION	APPR
4			
3			
2			
1			

PROJECT ENGINEER: JON E. HANLON
REG NUMBER: M33232
EXP DATE:

CAMBRIA COMMUNITY SERVICES DISTRICT
STUART STREET TANKS REPLACEMENT PROJECT

DETAILS

DESIGNED: JMK
DETAILED: JMK
CHECKED: MEP
APPROVED: ---
DATE: APRIL 2025

0 1/2 1
IF THIS BAR DOES NOT MEASURE 1" THEN DRAWING IS NOT TO FULL SCALE

PROJECT NO. 2-2024-STU

S-201
SHEET 19 OF 20

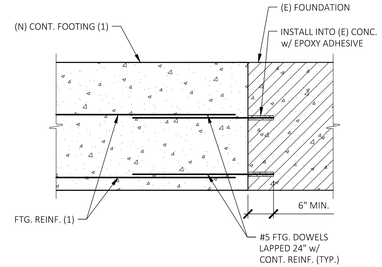

NOTES: (#)
1. SEE FOUNDATION PLANS AND NOTES

(N)/(E) FTG. INTERSECTION (41)

N.T.S.

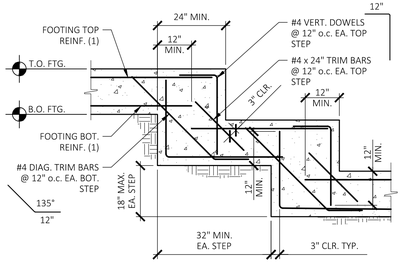

NOTES: (#)
1. SEE FOUNDATION PLAN AND NOTES

STEPPED FTG. AT RETAINING WL (31)

N.T.S.

RETAINING WALL DETAIL REFERENCE NOTES: (#)

1. GENERAL CONSTRUCTION NOTES:
   A. SEE TYPICAL DETAILS 11, 12, 13, 14 & 32 ON DETAIL SHEET S-202
   B. CMU SHALL BE FULLY GROUTED
   C. SPECIAL INSPECTION REQUIRED FOR RETAINING WALL STEM CONSTRUCTION AND PLACEMENT OF FOOTING DOWELS
   D. SEE DETAIL 31/S-202 FOR REQUIRED CONSTRUCTION OF STEPPED FOOTING
   E. SEE 33/S-202 FOR HORIZONTAL GROUT POUR BREAK. IF HIGH LIFT GROUTING PROCEDURE WILL BE USED, THE CONTRACTOR SHALL BE SUBMIT THE PROCEDURE FOR REVIEW BY THE STRUCTURAL ENGINEER OF RECORD
2. BOTTOM OF FOOTING SHALL BE FOUNDED 24" (MINIMUM) BELOW LOWEST ADJACENT GRADE
3. 12" GRAVEL COLUMN BACKFILL.
4. WATERPROOF MEMBRANE
5. RETAINED HEIGHT SHALL BE MEASURED FROM TOP OF FOOTING, NOT SLAB/FINISH GRADE
6. FILTER FABRIC PLACED BETWEEN GRAVEL AND SOIL CONFORMING TO CALTRANS SPECIFICATION SECTION 96-1.02B-CLASS C(WHERE GRAVEL COLUMN BACKFILL OCCURS)
7. CONTINUOUS KEY FROM BEVELED PLATE. USE 2x4 @ 8" CMU
8. 4"Ø PVC PERFORATED DRAIN PIPE, PLACE PERFORATIONS FACE DOWN
9. 12" LAYER OF WATER CONDITIONED, COMPACTED NATIVE MATERIAL
10. WHERE NO Y BARS ARE SPECIFIED, X DOWELS SHALL CONTINUE FULL HEIGHT OF WALL
11. SEE STRUCTURAL NOTES FOR ALTERNATE GEOCOMPOSITE DRAIN PANEL PERMISSIBLE TO BE USED IN LIEU OF FILTERFABRIC AND 12" GRAVEL COLUMN
12. ONSITE SOILS - DESIGN BASED ON ACTIVE PRESSURE = 50 PCF

RETAINING WALL NOTES (21)

N.T.S.

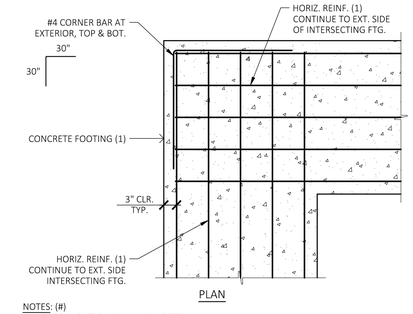

PLAN

NOTES: (#)
1. SEE FOUNDATION PLAN AND NOTES

TYP. FOOTING CORNER (11)

N.T.S.

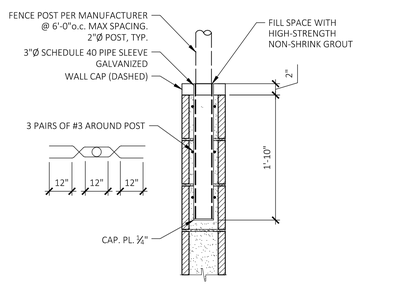

FENCE POST TO CMU WALL (42)

N.T.S.

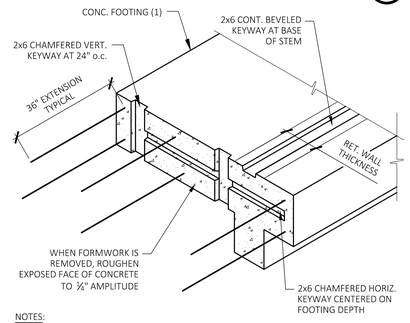

NOTES:
1. SEE FOUNDATION PLAN AND NOTES

FOOTING POUR BREAK (32)

N.T.S.

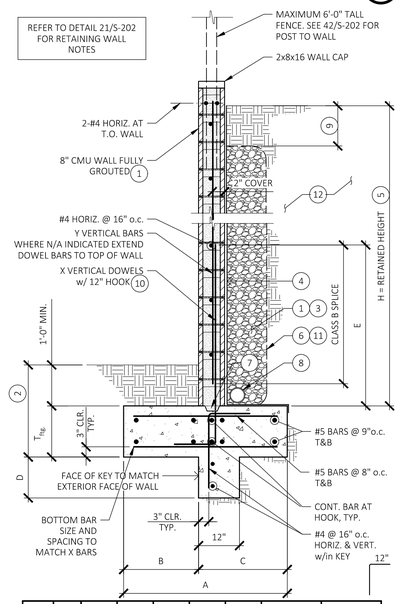

H	T_{ng}	A	B	C	D	E	X BARS	Y BARS
2'-0"	15"	2'-10"	1'-6"	1'-4"	N/A	N/A	#4 @ 16 "o.c.	N/A
4'-0"	15"	3'-6"	2'-2"	1'-4"	N/A	N/A	#6 @ 16 "o.c.	N/A
6'-0"	18"	4'-0"	2'-8"	1'-4"	12"	N/A	#7 @ 16"o.c.	N/A
8'-0"	18"	7'-0"	5'-8"	1'-4"	12"	4'-0"	#7 @ 8"o.c.	#6 @16"o.c.

NOTES: (#)
1. CONTRACTOR OPTION TO USE X BARS FULL HEIGHT ILO ADDING Y BARS AND LAP SPLICE

SITE RETAINING WALL 8ft & LESS (23)

N.T.S.

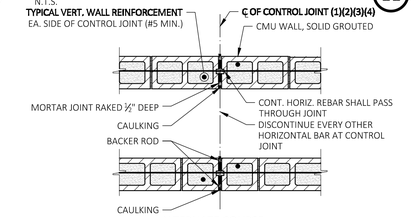

ALTERNATE COURSE

NOTES: (#)
1. CONTROL JOINTS SHALL OCCUR AT ONE AND A HALF TIMES THE WALL HEIGHT, 25'-0" o.c. (MAX.) OR AS SHOWN ON PLANS
2. JOINT SHALL BE CONTINUOUS FROM TOP OF FOOTING TO FIRST COURSE BELOW CONT. CHORD REINFORCING. THE REMAINING WALL ABOVE SHALL BE SAW CUT ¼" DEEP IN LINE WITH JOINT TO TOP OF WALL. FILL CUT WITH CAULKING.
3. VERIFY LOCATION WITH ARCHITECT/ENGINEER PRIOR TO COMMENCEMENT OF WORK.
4. SPECIAL CONSIDERATIONS MAY BE REQUIRED FOR FIRE RATED CONSTRUCTION MASONRY CONTROL JOINTS. SEE ARCHITECTURAL PLANS FOR FIRE RATING CONSTRUCTION REQUIREMENTS.

CMU CONTROL JOINT (12)

N.T.S.

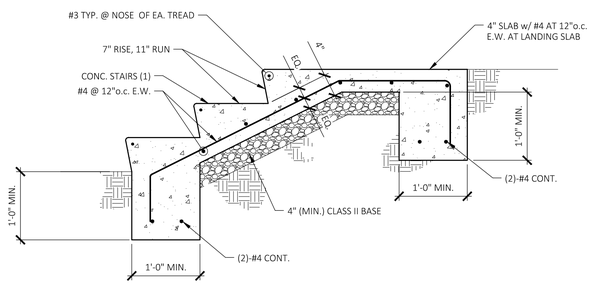

NOTES: (#)
1. SEE SITE PLAN AND NOTES

CONCRETE STAIR (43)

N.T.S.

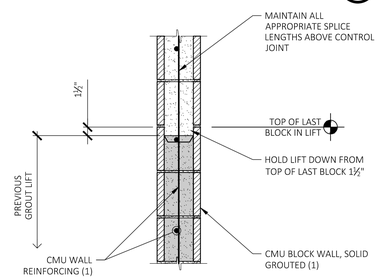

NOTES: (#)
1. SEE FRAMING/FOUNDATION PLAN AND NOTES

CMU HORIZ. POUR BREAK (33)

N.T.S.

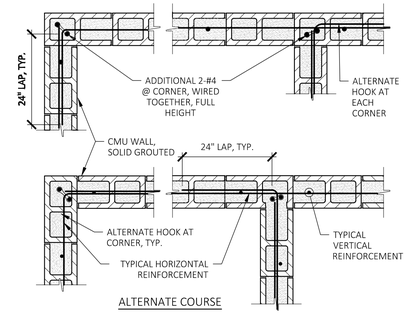

ALTERNATE COURSE

NOTES: (#)
1. LAP LENGTHS LISTED APPLY TO ALL LOCATIONS: VERTICAL, HORIZONTAL, TOP, BOTTOM, AND SITE WALLS
2. WHERE BARS OF A DIFFERENT SIZE ARE LAPPED, THE LAP LENGTH SHALL BE THE LENGTH REQUIRED BY THE LARGER BAR

TYP. CMU CORNER (13)

N.T.S.

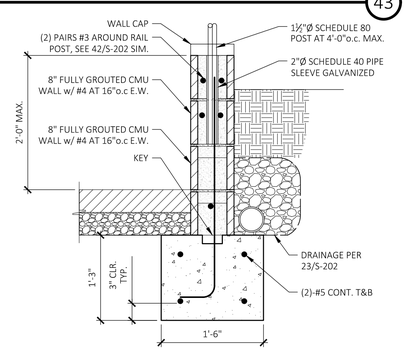

WALL SECTION (44)

N.T.S.

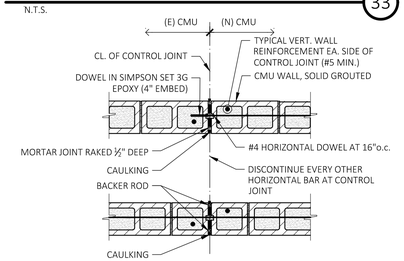

ALTERNATE COURSE

NOTES: (#)
1. SEE TYPICAL CONTROL JOINT DETAIL FOR INFO NOT SHOWN.

(N)/(E) CMU WALL (34)

N.T.S.

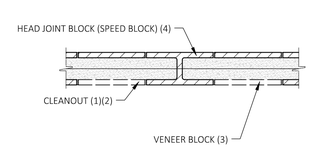

NOTES: (#)
1. CONSTRUCT CLEANOUTS SO THAT THE SPACE TO BE GROUTED CAN BE CLEANED AND INSPECTED, 3" SQUARE MINIMUM.
2. SPACE CLEANOUTS HORIZONTALLY AT EACH REINFORCED CELL.
3. AFTER CLEANING, CLOSE CLEANOUTS WITH VENEER BLOCK CLOSURE BRACED TO RESIST GROUT PRESSURE
4. CONSTRUCTION SEQUENCE:
   A. CLEAN AND INSPECT (BY SPECIAL INSPECTOR) CLEANOUTS.
   B. SEAL CLEANOUTS WITH VENEER BLOCK
   C. TO PREVENT BLOWOUTS, ALLOW MORTAR TO CURE FOR 2 DAYS MINIMUM
   D. GROUT WALL
5. BOTTOM COURSE OF WALL SHOWN

CMU BLOCK CLEANOUT (24)

N.T.S.

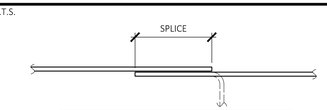

Bar Size	CMU Reinforcing Splices (1)(2)	
	Splice	f_y (Min.)
#3	15"	40 ksi
#4	20"	60 ksi
#5	25"	60 ksi
#6	34"	60 ksi
#7	46"	60 ksi
#8	68"	60 ksi

NOTES: (#)
1. LAP LENGTHS LISTED APPLY TO ALL LOCATIONS: VERTICAL, HORIZONTAL, TOP, BOTTOM, AND SITE WALLS
2. WHERE BARS OF A DIFFERENT SIZE ARE LAPPED, THE LAP LENGTH SHALL BE THE LENGTH REQUIRED BY THE LARGER BAR

TYPICAL CMU LAP SPLICES (14)

N.T.S.

811 Know what's below. Call before you dig.

REGISTERED PROFESSIONAL ENGINEER
JON E. HANLON
No. 5405
STRUCTURAL
STATE OF CALIFORNIA

DATE SIGNED:
04.30.2025

THESE DRAWINGS, NOTES AND DETAILS ARE INSTRUMENTS OF SERVICE AND ARE THE PROPERTY OF SSG STRUCTURAL ENGINEERS. THE DRAWINGS, DRAWINGS, INFORMATION, SPECIFICATIONS, IDEAS, DESIGNS AND ARRANGEMENTS REPRESENTED WITHIN THESE DOCUMENTS SHALL REMAIN THE PROPERTY OF THE ENGINEER. THEY SHALL NOT BE SHALL BE COPIED, DISCLOSED TO OTHERS OR USED IN CONNECTION WITH ANY WORK OR PROJECT OTHER THAN THE SPECIFIC PROJECT FOR WHICH THEY HAVE BEEN PREPARED AND DEVELOPED WITHOUT THE EXPRESSED WRITTEN CONSENT OF THE ENGINEER. COPYRIGHT 2025.

SSG Structural Engineers, LLP
805.482.3110
811 El Capitan Way, Suite 210
San Luis Obispo, CA 93401
ssgse.com
8455 N. Fresno Street, Suite 120
Fresno, CA 93720

mkn
354 PACIFIC STREET
SAN LUIS OBISPO, CA 93401 (805) 904-6530

REV	DATE	DESCRIPTION	APPR
4			
3			
2			
1			

PROJECT ENGINEER: JON E. HANLON
REG NUMBER: M33232
EXP DATE:

CAMBRIA COMMUNITY SERVICES DISTRICT
STUART STREET TANKS REPLACEMENT PROJECT

DETAILS

DESIGNED: JMK
DETAILED: JMK
CHECKED: MEP
APPROVED: ---
DATE: APRIL 2025

0 1/2 1
IF THIS BAR DOES NOT MEASURE 1" THEN DRAWING IS NOT TO FULL SCALE

PROJECT NO. 2-2024-STU

S-202
SHEET 20 OF 20